# HORIZON RAMDISK 256K EXPANSION PROJECT

by EDWARD A. HALLETT

SOUTHWEST NINETY-NINERS

The HORIZON RAMDISK is available in 90K SSSD (360 SECTOR) and 180K DSSD (720 SECTOR) sizes. This project expands the size to 256K (976 SECTORS) for an increase in storage capacity of 64K (256 SECTORS) or 35.5%.

This increase is accomplished by adding one 74LS154 (4 to 16 DECODER), one 74LS02 (NOR GATE), and eight 8K 6264LP-15 STATIC RAM chips, removing one 74LS138 (3 to 8 DECODER) chip, and modifying the DSR CODE to recognize the existance of the added memory. The original HORIZON RAMDISK CIRCUIT does not fully decode one of the five memory address lines from U9 limiting it to 180K. By fully decoding this line we pick up eight more CHIP SELECT SIGNALS bringing us up to 256K (976 SECTORS). This utilizes the original design to its fullest potential with only a few SIMPLE MODIFICATIONS.

The HORIZON SOURCE CODE VER_03 was used in this project but modifications to other versions should be very similar. (Note: VER_04 arrived as this was going to press. All modifications were identical, except MEMTEST. Use the modified MEMTEST from VER_03 to check the memory added by this EXPANSION PROJECT.

::::::

6. Install the ADDITIONAL 4 TO 16 DECODER CHIP (74LS154) PIGGYBACKED on top of the ORIGINAL 4 TO 16 DECODER CHIP, U2. Connect PIN 12 and PINS 20 THRU 24 to their corresponding PINS below. Bend PINS 1 THRU 11 and PINS 13 THRU 19 OUTWARD. Reinstall the PIGGYBACKED PAIR of 4 TO 16 DECODERS in its U2 socket. Connect lines from the UPPER CHIP PINS 1 THRU 8 as follows.

PIN 1 to U1 SOCKET PIN 15.
PIN 3 to U1 SOCKET PIN 13.
PIN 5 to U1 SOCKET PIN 11.
PIN 7 to U1 SOCKET PIN 9.
PIN 2 to U1 SOCKET PIN 14.
PIN 4 to U1 SOCKET PIN 12.
PIN 6 to U1 SOCKET PIN 10.
PIN 8 to U1 SOCKET PIN 7.

These provide the CHIP SELECT SIGNALS to the ORIGINAL (CENTER LAYER) of 8K RAM CHIPS.

Connect lines from the UPPER CHIP PINS 9 THRU 11 and 13 THRU 17 as follows.

PIN 9 to PIN 20 U3 TOP 8K CHIP.
PIN 11 to PIN 20 U5 TOP 8K CHIP.
PIN 14 to PIN 20 U12 TOP 8K CHIP.
PIN 16 to PIN 20 U14 TOP 8K CHIP.
PIN 10 to PIN 20 U4 TOP 8K CHIP.
PIN 13 to PIN 20 U6 TOP 8K CHIP.
PIN 15 to PIN 20 U13 TOP 8K CHIP.
PIN 17 to PIN 20 U15 TOP 8K CHIP.

These provide the CHIP SELECT SIGNALS to the ADDITIONAL EIGHT 8K RAM CHIPS (TOP LAYER)

7. Install a new NOR GATE (74LS02) PIGGYBACKED on top of the ORIGINAL NOR GATE, U10. Connect PINS 2, 7, and 14 to the CORRESPONDING PINS below. BEND PINS 1, 3 THRU 6, and 8 THRU 13 outward. Reinstall the PIGGYBACKED PAIR of NOR GATES in its U10 socket. Connect LINES from the UPPER CHIP as follows.

PIN 1 to PINS 18 and 19 U2 UPPER CHIP.
PIN 3 to U1 SOCKET PIN 6.

These provide the CHIP SELECT SIGNAL for U2 UPPER 4 TO 16 DECODER CHIP thus fully decoding the available MEMORY ADDRESS LINES.

PINS 4 THRU 6 and PINS 8 THRU 13 of the UPPER NOR GATE U10 are not used and are left NOT connected. They may be used in future modifications.

This completes the HARDWARE modifications to the RAMDISK CARD. Next the DSR SOFTWARE must be modified so that this ADDITIONAL MEMORY can be accessed.

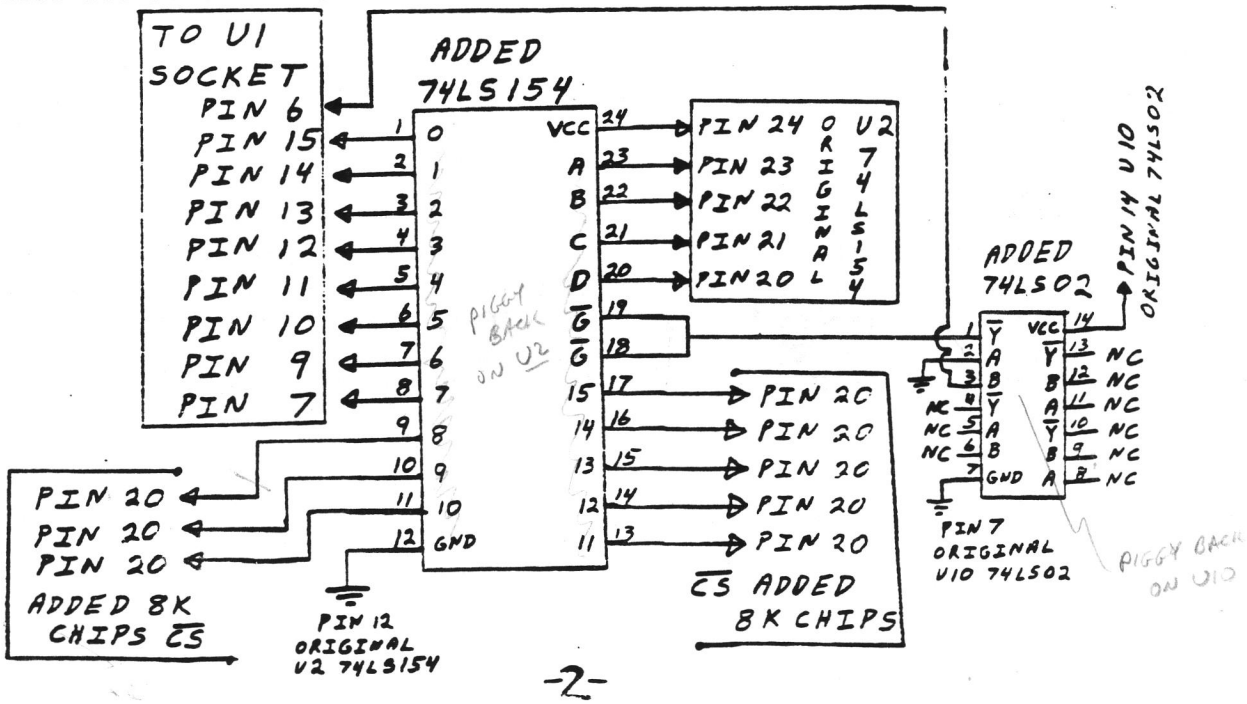

NOTE FROM BUD .... YOU CAN DO WHAT YOU WANT TO DO TO THE VER03 OR VER04 BUT THE MENU6.3 OR MENU7.3 ARE MUCH BETTER AND ARE ALREADY TO USE ON ANY SIZE CARD.

The original DSR CODE, CALL SUBPROGAMS, ETC. are located in RACKS 90-92 at the top of the RAMDISK MEMORY MAP. The MODIFIED RAMDISK MEMORY MAP now extends to RACK 124 and the DSR must be moved to the new top, in RACKS 122-124.

NOTE: IF THE CODE IS NOT MOVED IT WILL BE ERASED WHEN THE RAMDISK IS INITIALIZED TO MORE THAN 720 SECTORS.

The changes to the CODE, consist of changing ALL REFERENCES for the three upper 2K blocks of memory to a NEW LOCATION, changing the LOADER PROGRAMS to LOAD the NEW CODE at the NEW LOCATION, changing the MEMTEST PROGRAM to check THIRTY-TWO 8K CHIPS, changing the MAX SECTOR CALL, and modifying the FORMAT ROUTINE of the DSR.

Luckily, this is much EASIER than it might appear since the SOURCE CODE for the HORIZON RAMDISK was provided with the KIT and is very well Documented!

The following PROGRAMS will need to be modified and then REASSEMBLED with the EDITOR-ASSEMBLER. CALL/S, CHECK/S, CLEAR/S, CREATE/S, FILL/S, LOADER/S, PARTA, SVXB/S, XB/S, and VERSION/S.

The BASIC program MEMTEST must also be modified. The other ORIGINAL SOURCE programs do not require modifications and are used as is.

1. MEMTEST
   Delete LINES 110, 130 thru 170, 190, 200, 320 thru 340. Change LINE 180 from "LENGTH=24" to "LENGTH=32".

2. CALL/S.
   Change "CI R2,1441" to "CI R2,977" at LABEL MAX02.

3. CHECK/S.
   Change "CI R2,24" to "CI R2,32" (fourth LINE after LABEL CHK1).

4. CLEAR/S.
   Change "LI R2,90" to "LI R2,123" (fourth LINE after LABEL LOOP1).

5. CREATE/S.
   Change "DATA >BB00" to "DATA >FB00" at LABEL LINK1.
   Change "DATA >BD00" to "DATA >FD00" at LABEL LINK2.
   Change "DATA >BF00" to "DATA >FF00" at LABEL LINK3.
   Change "PARTA_03" to "PARTA256" in the TEXT LINE after LABEL PDATA.
   Change "PARTB_03" to "PARTB256" in the TEXT LINE after LABEL LDATA.

6. FILL/S.
   Change "LI R5,93" to "LI R5,125" (one LINE before LABEL FLOOP1).

7. LOADER/S.
   Change "DATA >BB00" to "DATA >FB00" at LABEL LINK.
   Change "BYTE >BB" to "BYTE >FB" at LABEL MXL1.
   Change "BYTE >BD" to "BYTE >FD" at LABEL MXL2.
   Change "BYTE >BF" to "BYTE >FF" at LABEL MXL3.

DISREGARD V 7.3 SOFTWARE TAKES CARE OF THESE SOFTWARE MODS.

8. PARTA.
   Change "DATA 720" to "DATA 976" at LABEL MAXSEC.
   Change "DATA 720" to "DATA 976" at LABEL FORSEC.
   Change "DATA >BB00" to "DATA >FB00" at LABEL LINK1.
   Change "DATA >BD00" to "DATA >FD00" at LABEL LINK2.
   Change "DATA >BF00" to "DATA >FF00" at LABEL LINK3.
   Add the LINES "C R8,@MAXSEC" and "JEQ FFDONE" after the LINE "INC R8" (fourth LINE after LABEL FMTLP1.
   Add the LINE "FFDONE MOV R8,R3" after the LINE "JNE FMTLP0" (sixth LINE after LABEL FMTLP1.

9. SVXB/S.
   Change "LI R1,>BF00" to "LI R1,>FF00" (fourth LINE after LABEL SVXB.

10. VERSION/S.
   Change "DATA >BB00" to "DATA >FB00" at LABEL LINK1.
   Change "DATA >BD00" to "DATA >FD00" at LABEL LINK2.
   Change "DATA >BF00" to "DATA >FF00" at LABEL LINK3.
   Change "PARTA_03" to "PARTA256" in the TEXT LINE after LABEL PDATA.
   Change "PARTB_03" to "PARTB256" in the TEXT LINE after LABEL LDATA.

11. XB/S.
   Change "CI R2,1441" to "CI R2,977" at LABEL MAX02.

REASSEMBLE these FILES to create the NEW OBJECT FILES. Then REASSEMBLE the FILE "TEST/S" which ASSEMBLES the DSR FILES PARTA thru PARTE. Call this FILE "DSR256". ASSEMBLE the ORIGINAL FILES "CHAR/S" and "DOWNLD/S" from the HORIZON SOURCE DISK.

Next RUN the "LOADER" program assembled from "LOADER/S" to LOAD the following:
   "DSR256" into BLOCK 1.
   "CALL" from the assembled FILE "CALL/S" into BLOCK 2.
   "CHAR" from the assembled FILE "CHAR/S" into BLOCK 3.
   "DOWNLD" form the assembled FILE "DOWNLD/S" into BLOCK 3.

Now RUN this BASIC program.

```
100 CALL .INIT
110 CALL LOAD("DSK1.XB")
120 CALL LOAD("DSK1.SVXB")
130 CALL LINK("SVXB")
140 END
```

NOTE: The RAMDISK MUST be set at CRU 1000 for the SVXB program to work as it does NOT search for the HORIZON CARD CRU like the other programs do. If you have another CARD at CRU 1000 (like the MYARC 128K or 512K CARD) you can change the sixth LINE of the "SVXB/S" FILE from "LI R12,1000" to "LI R12,(CRU of your HORIZON CARD)".

The modified DSR CODE, CALL SUBPROGRAMS ETC. are now LOADED in their NEW locations in RACKS 122 THRU 124. Next RUN the program "CREATE" from the assembled FILE "CREATE/S" (PROGRAM NAME "IMAGE"). This will create the FILES "PARTA256" and "PARTB256" on DSK1 for use with the VER256 LOADER from the assembled FILE "VERSION/S"

The SOURCE CODE for the program "UTIL1" (the multiple RAMDISK LOADER) was not provided on the HORIZON SOURCE CODE DISK. It can be modified by DISSASSEMBLING it with "MILLERS GRAPHICS DISkASSEMBLER", finding the four words >02D0, >BB00, >BD00, d >BF00, changing them to >03D0, >FB00, >FD00, >FF00, changing "PARTA_03" and ARTB_03" to "PARTA256" and "PARTB256", REASSEMBLING the program, and then RUNning the SAVE UTILITY from the EDITOR/ASSEMBLER to change it back to PROGRAM IMAGE FORMAT.

This completes the DSR modifications. All functions of the HORIZON RAMDISK will function as they did originally, but now being able to UTILIZE 976 SECTORS (256K).

When formatting the 976 SECTOR RAMDISK select DSDD format. The DISKMANAGER will show "974 SECTORS FREE" and "466 SECTORS USED". This is because the DISKMANAGER is trying to format 1440 SECTORS and reads 466 USED during SECTOR VERIFICATION. This does not affect RAMDISK OPERATION in any way but it can be corrected to show "974 SECTORS FREE" and "2 SECTORS USED" by changing BYTES 10 and 11 of SECTOR 0 from >05A0 to >03D0. The following program is used to correct the SECTORS FORMATTED number.

```
       DEF  START
SECTOR DATA >03D0
START  LI   R12,>1200 CRU OF YOUR CARD
       LI   R1,7
       SWPB R1
       LDCR R1,8
       MOV  SECTOR,@>580A
       SBZ  0
       RT
       END  START
```

This completes the HORIZON RAMDISK 256K EXPANSION PROJECT.

Questions concerning this EXPANSION PROJECT should be sent to:
EDWARD A. HALLETT, 5600 S. COUNTRYCLUB #64, TUCSON AZ 85706. Phone (602)889-6930.

## FROM LES

Thank you for letting me demonstrate the MYARC products. Just wish my hard disk system didn't crash, I wasn't quite prepared for an ad-lib demo. Even more important I hope you will all fogive me. I would like to make a trip out that way again with the new computer some day and show it to all of you.

I will provide to the group and to those who purchase products from me all future updates to hardware or software at no cost other than shipping. If a customer has a problem with a piece of hardware and it is in warranty I will replace the hardware instead of the customer having to send it to MYARC for a replacement. If the product is out of warranty we will also repair the product for a nominal fee plus parts.

Thanks again,
Les Merryman
MYARC Western Rep.

# VER_04 OPERATING INSTRUCTIONS

All software essential to the operation of your HORIZON RAMDISK may be executed as menu choices from the Extended Basic LOAD program on your new HORIZON RAMDISK SYSTEM MASTER disk. Place your VER_04 System Master disk in drive 1 and select Extended Basic. The LOAD program will present you with a choice of the Operating System Loader, DM-1000, or MEMTEST. Type your selection and press ENTER. Or you may...

Execute the Operating System Loader from:

EDITOR/ASSEMBLER- place the System Master Disk in any drive, select option 5 (Run Program File), type DSK#.UTIL1, and press ENTER. Or from...

TI-WRITER- place the System Master Disk in drive 1, select option 3 (Utility), and press enter.

Execute DM-1000 from:

EDITOR/ASSEMBLER- place the System Master Disk in any drive, select option 5 (Run Program File), type DSK#.MGR1, and press ENTER. Or from...

TI-WRITER- place the System Master Disk in any drive, select option 3 (Utility), type DSK#.MGR1, and press ENTER.

Execute MEMTEST from:

Extended Basic or
TI-Basic with the EDITOR-ASSEMBLER or MINI-MEMORY cartridge.

Place the System Master Disk in any drive and type:

```
>OLD DSK#.MEMTEST
>RUN
```

## OPERATING SYSTEM LOADER INSTRUCTIONS

Instructions for using the Operating System Loader are displayed on the screen when you execute the loader. Following that screen you will be shown the CRU addresses from >1000 to >1700. The display will indicate whether a HORIZON RAMDISK(s) is present and indicate, for each Ramdisk, the status of the Operating System, drive number, number of floppies, write protection, and maximum sectors. The arrow keys move the cursor around the display. You can load OR disable the Operating System for a particular Ramdisk by typing Y or N in the DSR field. (The System Master must be online). Any other item can be changed by typing the new value in the appropriate field. When you are satisfied with the configuration of your Ramdisk(s) you may exit the loader with FCTN Q.