810 DISK DRIVE FIELD SERVICE MANUAL

ATARI®

ATARI®

A Warner Communications Company

FD100003
Rev. 03
May, 1983

COPYRIGHT © 1982 BY ATARI, INC. ALL RIGHTS RESERVED

No part of this publication may be reproduced by any mechanical, photographic, or electronic process, or in the form of a phonographic recording, nor may it be stored in a retrieval system, transmitted, or otherwise copied for public or private use, without permission from the publisher.

This technical manual, its accompanying schematic diagrams, and the trouble-shooting guide are protected by the new Copyright Act of 1976.

This Act provides for increased penalties for violating federal copyright laws. Courts can impound infringing articles while legal action is pending. If infringers are convicted, courts can order destruction of the infringing articles.

In addition, the Act provides for payment of statutory damages of up to $50,000 in certain cases. Infringers may also have to pay costs and attorneys' fees, fines up to $25,000 and face an imprisonment of up to one year.

Atari will aggressively enforce its copyrights against any infringers.

Published By:
Atari, Inc.
1265 Borregas Avenue
P. O. Box 427
Sunnyvale, California 94086
U.S. America

E.C.R. NO. 0033

ATARI, INC.
Consumer Product Services
845 W. Maude Avenue
Sunnyvale, CA 94041

A Warner Communications Company

ENGINEERING CHANGE REQUEST

LATEST:

DATE	REQUESTER	PART NO.	REV.
05/03/83	M. Condit	FD100003	Rev. 03

PART TITLE
810 Disk Drive Field Service Manual

REASON FOR CHANGE REQUEST:
Update Schematics

DESCRIPTION OF CHANGE:

Replace cover and pages 2-1 thru 2-7 and 8B-3 thru 8B-9.

Retain this ECN as a record of changes made to the basic publication.

For Reference Only
Changes have been incorporated into manual.

ENGINEERING CHANGE REQUESTER — PLEASE COMPLETE ABOVE DOTTED LINE

REASON FOR CHANGE DENIAL OR COMMENTS:

PARTS DISPOSITION:

NONE

	DATE
DOCUMENT CONTROL KPS	5-9-83
TECH SUPPORT MGR	5/4/83
MATERIALS MGR	
DOCUMENTATION MGR	5/3/83

ENGINEERING CHANGE NOTICE

WHEN SIGNATURES AND E.C.N. NO. ARE PRESENT THIS E.C.R. BECOMES AN E.C.N.

E.C.N. NO. 0033

E.C.R. NO. 0001

ATARI, INC.
Consumer Product Services
845 W. Maude Avenue
Sunnyvale, CA 94041
A Warner Communications Company

ENGINEERING CHANGE REQUEST

DATE of Origination	REQUESTER	PART NO.	REV.
12/1/82	Elsa Guyre	FD100003, Rev. 2	

PART TITLE
810 Disk Drive Field Service Manual

REASON FOR CHANGE REQUEST:
Updating Parts List, Adding Appendix

DESCRIPTION OF CHANGE:

Please replace the cover page through vii and pages 3-11 through 3-13, 4-19, 5-9, 8-1, 8B-1, and 8B-29 of the referenced manual.

Replace pages 6-9 through 6-15 with pages 6-9 through 6-15.

Replace pages 7-1 through 7-3 with pages 7-1 through 7-5.

Replace pages 8B-37 through 8B-41 with pages 8B-37 through 8B-41.

Add pages 8C-1 through 8C-39 after page 8B-43.

Retain this ECN as a record of changes made to the basic publication.

FOR REFERENCE ONLY

ENGINEERING CHANGE REQUESTER — PLEASE COMPLETE ABOVE DOTTED LINE .....

REASON FOR CHANGE DENIAL OR COMMENTS:

PARTS DISPOSITION:

Discard replaced pages

DOCUMENT CONTROL	[illegible]	DATE 1-27-83
TECH SUPPORT MGR	[illegible]	DATE 1/27/83
MATERIALS MGR		DATE
DOCUMENTATION MGR	[illegible]	DATE 12/01/82

ENGINEERING CHANGE NOTICE

WHEN SIGNATURES AND E.C.N. NO. ARE PRESENT THIS E.C.R. BECOMES AN E.C.N.

E.C.N. NO. 0001

ATARI 810 DISK DRIVE

FIELD SERVICE MANUAL

Atari believes that the information described in this manual is accurate and reliable, and much care has been taken in its preparation. However, no responsibility, financial or otherwise, shall be accepted for any consequences arising out of the use of this material. Information contained herein is subject to change. Revisions may be issued to advise of such changes and/or additions.

Figures 8C-2, 8C-5, 8C-7, 8C-8, and 8C-9 are reproduced with permission of Tandon Corporation from **"OEM Operating and Service Manual™ 100-1 and -2 Disk Drives 48 Tracks Per Inch"** #179-022-001, Copyright©1981, Tandon Corporation.

Correspondence regarding this document should be forwarded to Manager of Technical Support, Consumer Product Service, Atari, Incorporated, 845 W. Maude Avenue, Sunnyvale, CA 94086.

TABLE OF CONTENTS

Section	Title	Page
	INTRODUCTION	vii
1	THEORY OF OPERATION	1-1
	Functional Flow of the 810	1-2
	Operator Functions	1-3
	Mechanical Characteristics	1-6
	Case	1-6
	Drive Mechanism	1-7
	Head Carriage Assembly	1-7
	Drive Motor	1-7
	Stepper Motor	1-7
	PCB Assemblies	1-7
	Power Supply	1-10
	Power-Up Logic	1-11
	Electronics	1-11
	Clock	1-13
	6507 Microprocessor Unit (Microprocessor)	1-13
	Read-Only- Memory (ROM)	1-14
	Random Access Memory (RAM)	1-14
	6532 Peripheral Interface Adaptor (PIA)	1-14
	1771 Floppy Disk Controller (FDC)	1-15
	Write Erase Logic	1-17
	Write Protect Logic	1-18
	Read Logic	1-19
	Read/Write Head	1-20
	Erase Head	1-21
	Serial Bus	1-22
	Line Assignments	1-22
	Electrical Specifications	1-23
	Serial Bus Protocol	1-23
2	SILKSCREENS AND SCHEMATICS	2-1
3	TEST EQUIPMENT/DIAGNOSTIC TESTS	3-1
	Equipment Requirements	3-1
	Hook-Up	3-1
	Check of Mechanical Components	3-1
	Preventive Maintenance/Precautions	3-1
	Diagnostic Tests	3-1
	Power-Up Test	3-2
	Burn-In Test	3-2
	DOS Verification Procedure	3-5
	Alignment Program	3-7

TABLE OF CONTENTS (Cont)

Section	Title	Page
4	DIAGNOSTIC FLOWCHARTS	4-1
	Overview	4-1
	The Swap-Out Procedure	4-1
	Replace in Order	4-1
5	SYMPTOM CHECKLIST	5-1
	Overview	5-1
	Side Board Failures	5-2
	Stepper Motor Circuit	5-2
	Power-up Logic and Data Interface Circuits	5-2
	Write Circuit	5-3
	Write Protect Circuit	5-3
	Read Circuit	5-3
	Central Processing System	5-4
	Rear Board Failures	5-5
	Drive Motor and Tach Feedback Circuit	5-5
	Power Supply Circuits	5-6
	Write Circuit	5-6
	Read Circuit	5-7
	Drive Mechanism Failures	5-9
	Symptom Checklist Waveforms	5-10
6	DISASSEMBLY/ASSEMBLY	6-1
	Static Protection in Work Area	6-1
	Safety	6-1
	Preventive Maintenance	6-2
	Precautions	6-2
	Disassembly	6-2
	Disk Drive Case Disassembly	6-3
	Common Baseplate and Front Panel Removal	6-4
	Side PCB and RF Shield Removal	6-5
	Rear PCB Removal	6-7
	Drive Mechanism Removal	6-8
	Drive Mechanism Component Disassembly	6-10
	Adjustments and Replacements	6-11
	Stepper Motor Positioning Band and Pulley	6-11
	Eject Spring Assembly	6-12
	Right Hand Guide/Write Protect Assembly	6-13
	Assembly	6-13
	Rear PCB Assembly	6-14
	Drive Mechanism Component Assembly	6-14
	Drive Belt Assembly	6-14
	Drive Mechanism Assembly	6-14
	Side PCB and RF Shield Assembly	6-14
	Common Baseplate and Front Panel Assembly	6-15
	Disk Drive Case Assembly	6-15

TABLE OF CONTENTS (Cont)

Section	Title	Page
7	PARTS LIST	7-1
8	APPENDIX	8-1
	A. Atari 810 Disk Drive Specifications	8-1
	B. 810 Analog Disk Drive	8B-1
	C. Tandon Drive Mechanism	8C-1
9	SERVICE BULLETINS	9-1

List of Illustrations

Figure	Title	Page
1-1	Simplified Block Diagram	1-2
1-2	System Hook-up	1-3
1-3	Disk Drive Controls/Indicators	1-5
1-4	Disk Drive Outer Case	1-6
1-5	Disk Drive Mechanical Elements	1-8
1-6	Power Supply Block Diagram	1-10
1-7	Disk Drive Electronics	1-12
1-8	Write/Erase Logic	1-17
1-9	Read Logic	1-19
1-10	Erase Head Gaps	1-21
2-1	Schematic 810 Side Board	2-3
2-2	Silkscreen 810 Side Board	2-4
2-3	I.C. Component Placement 810 Side Board	2-5
2-4	Schematic 810 Rear Board	2-6
2-5	Silkscreen 810 Rear Board	2-7
2-6	I.C. Component Placement Rear Board	2-8
2-7	Data Separator Schematic	2-9
2-8	Data Separator Silkscreen	2-10
2-9	Data Separator I.C. Component Placement	2-11
3-1	Channel A & B Probe Connections	3-8
3-2	Head Azimuth Waveform	3-11
3-3	Head Assembly - Component Identification	3-13
3-4	Cat's - Eye Pattern	3-14
3-5	Amplitude Variation of Cat's - Eye	3-15
3-6	Setscrew Location	3-16
3-7	Speed Adjustment Waveform	3-17
3-8	Head to Setscrew Clearance	3-18
5-1	1 MHz Clock Signal at Pin 3 of Z105	5-10
5-2	Side Board Read Circuit Waveforms	5-10
5-3	Rear Board Write Circuit Waveforms	5-11
5-4	Rear Board Read Circuit Waveforms	5-12

List of Illustrations

Figure	Title	Page
6-1	Disk Drive Case Disassembly	6-3
6-2	Common Baseplate and Front Panel Removal	6-5
6-3	Side PCB and RF Shield Removal	6-6
6-4	Rear PCB Removal	6-8
6-5	Drive Mechanism Removal	6-9
6-6	Drive Belt Removal	6-11
6-7	Positioning Band and Pulley Replacement	6-12
8B-1	Schematic Power Supply	8B-3
8B-2	Silkscreen Power Supply	8B-4
8B-3	Schematic Analog Board	8B-5
8B-4	Analog Board Silkscreen	8B-6
8B-5	Schematic 810 Sideboard	8B-7
8B-6	Silkscreen 810 Sideboard	8B-8
8B-7	Schematic 810 External Data Separator	8B-9
8B-8	Silkscreen External Data Separator	8B-10
8B-9	Power Supply Board Removal	8B-31
8B-10	Analog Board Removal	8B-32
8B-11	Drive Mechanism Removal	8B-33
8C-1	Tandon Drive Mechanism	8C-2
8C-2	Upper Arm and Nuts	8C-6
8C-3	Cat's -Eye Pattern	8C-7
8C-4	Amplitude Variation of Cat's - Eyes	8C-8
8C-5	Module Retaining Screws and Cam Screw	8C-10
8C-6	Speed Adjustment Waveform	8C-11
8C-7	Track 00 Stop Screw	8C-12
8C-8	Write Protect Switch Assembly	8C-13
8C-9	Upper Arm Assembly	8C-15

List of Tables

Title		Page
1-1	FDC Registers/Contents	1-16
1-2	Write/Erase Logic	1-18
1-3	Read Logic Elements	1-20
1-4	Serial Bus Line Assignments	1-22
8C-1	Tandon/MPI Mechanical Differences	8C-3

INTRODUCTION

The 810 Disk Drive Field Service Manual is a reference guide for you, the service technician. The information presented in this manual, when used in conjunction with ATARI training enables you to repair and maintain ATARI 810 Disk Drive units.

This Field Service Manual is organized in 11 sections:

- **THEORY OF OPERATION** - Overview of how the 810 Disk Drive works and what its basic assemblies look like.
- **SILKSCREENS AND SCHEMATICS** - Electrical drawings and layouts of printed circuit boards.
- **TEST EQUIPMENT/DIAGNOSTIC TESTS** - Review of all Diagnostic Tests available for diagnosing 810 Disk Drive problems.
- **DIAGNOSTIC FLOWCHARTS** - Aids for troubleshooting the 810 Disk Drive.
- **SYMPTOM CHECKLIST** - Failure information to assist the experienced technician arrive at a rapid diagnosis of 810 Disk Drive problems.
- **DISASSEMBLY/ASSEMBLY** - Detailed procedures for disassembling and assembling the 810 Disk Drive .
- **PARTS LIST** - Detailed breakdown of all parts used in the 810 Disk Drive.
- **APPENDIX A** - Contains 810 mechanical and electrical specifications.
- **APPENDIX B** - Contains all procedures and information required to troubleshoot and repair the new ATARI 810 Analog Disk Drive.
- **APPENDIX C** - Contains all procedures and information required to troubleshoot and repair ATARI 810 Disk Drives with the Tandon Drive Mechanism.
- **SERVICE BULLETINS** - Section to be used to hold Field Change Orders, Upgrade Bulletins and Tech Tips.

SECTION 1

THEORY OF OPERATION

OVERVIEW

The ATARI 810 Disk Drive is a record/playback device that allows information to be stored and retrieved quickly and accurately. The actual recording is much like a tape recording process, and is done on similar material. The data is magnetically recorded on a 5 1/4 inch diameter diskette. Each diskette can store 88K bytes of programs and/or data. The diskette is inserted through a door in the front panel of the drive unit. The 810 Disk Drive is used with a single ATARI 400 or 800 Computer with a minimum of 16K of RAM installed.

Figure 1-1 is a simplified block diagram of the functional flow of the 810.

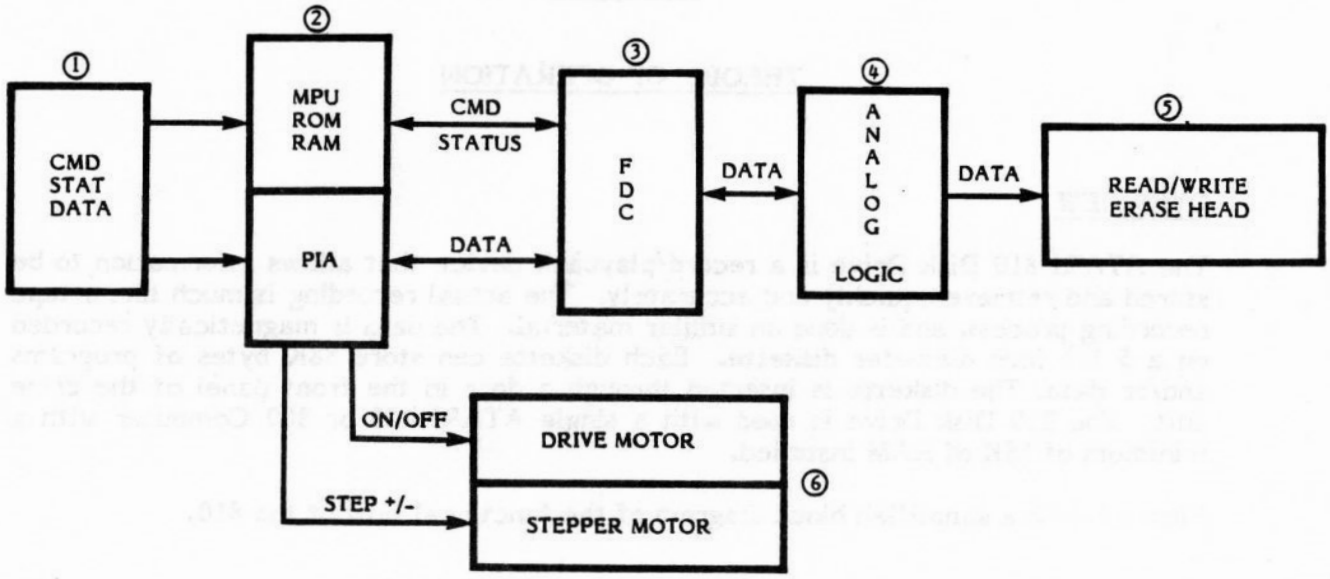

Figure 1-1. Simplified Block Diagram

Use Figure 1-1 as reference for the following paragraphs.

Block 1 shows the Data Input/Output (I/O) connectors. They are the origin and destination of all data, commands and status.

Block 2 shows the Microprocessor (MPU), Read-Only-Memory (ROM), Random-Access-Memory (RAM) and Peripheral Interface Adaptor (PIA) located on the Side Board. They process all commands and control data flow to and from the console.

Block 3 shows the 1771 Floppy Disk Controller (FDC) located on the Side Board. The FDC controls data flow to and from the diskette.

Block 4 shows the Analog Logic located on the Rear Board. The Analog Logic processes all data to and from the Read/Write Head.

Block 5 shows the Stepper Motor and Drive Motor which are located in the Drive Mechanism. They receive signals from the PIA.

Block 6 shows the Read/Write and Erase Head.

OPERATOR FUNCTIONS

Each 810 Disk Drive comes with an AC Power Adaptor and a Data Cord. Figure 1-2 shows how to connect the Disk Drive and computer console to make a complete system.

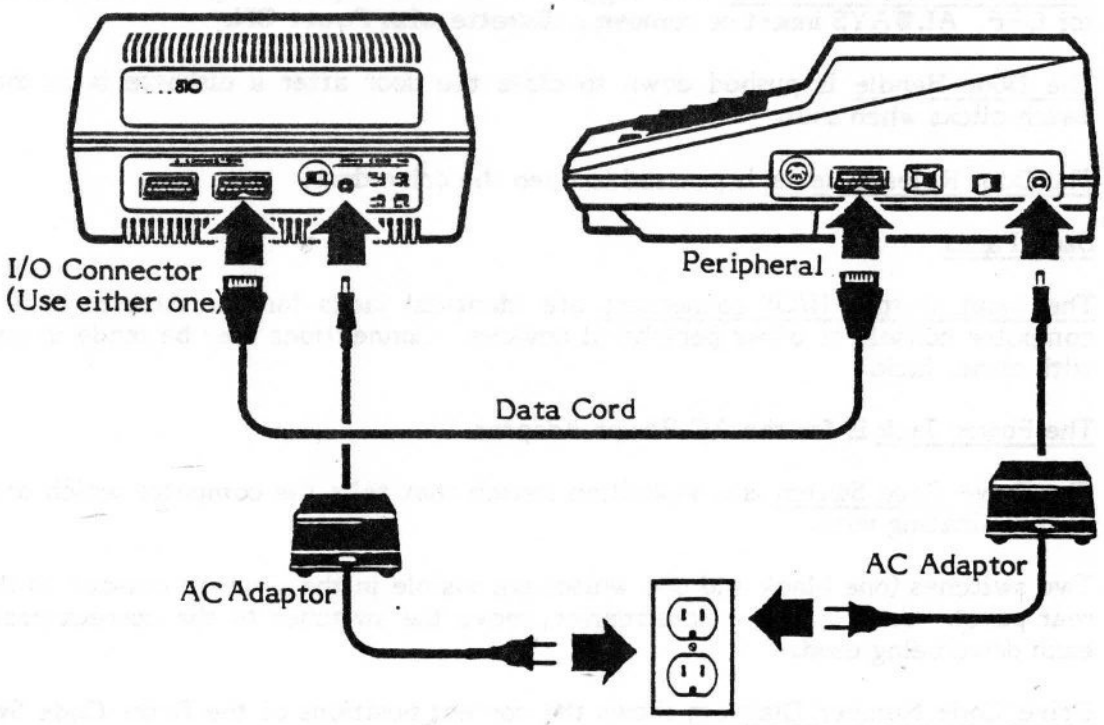

Figure 1-2. System Hook-up

The Controls/Indicators are located on the front and back panels of the 810. The front panel of the 810 contains the Busy Indicator Light, the Power Indicator Light, Power ON/OFF switch, door handle and door release lever. The rear panel of the 810 contains the Input/Output (I/O) connectors, Power-Jack, Drive Code Switch and Drive Code Number Diagram.

These functions are illustrated in Figure 1-3 and discussed in the following paragraphs.

Front Panel

The Busy Indicator Light is lit whenever the drive is reading from or writing to a diskette. **DO NOT OPEN THE DRIVE DOOR, TURN POWER OFF, OR ATTEMPT TO REMOVE THE DISKETTE WHEN THIS LIGHT IS ON!**

The Power Indicator Light is lit whenever power to the Drive is on.

The Power ON/OFF switch is a toggle switch that is pushed up for **ON,** pushed down for **OFF. ALWAYS insert or remove a diskette with Power ON.**

The Door Handle is pushed down to close the door after a diskette is in the drive. Latch clicks when shut.

The Door Release Lever is pressed to open the drive door.

Back Panel

The Input Output (I/O) connectors are identical jacks for the data cords from the computer console or other peripheral devices. Connections may be made in any order with either jack.

The Power Jack is for the AC Power Adaptor.

The Drive Code Switch is a 4-position switch that tells the computer which drive it is communicating with.

Two switches (one black and one white) are visible in the circular cut-out on the drive rear panel. Using a pen or screwdriver, move the switches to the correct position on each drive being used.

Drive Code Number Diagram shows the correct positions of the Drive Code Switch to set the identification of the Drive (1 thru 4).

FRONT PANEL

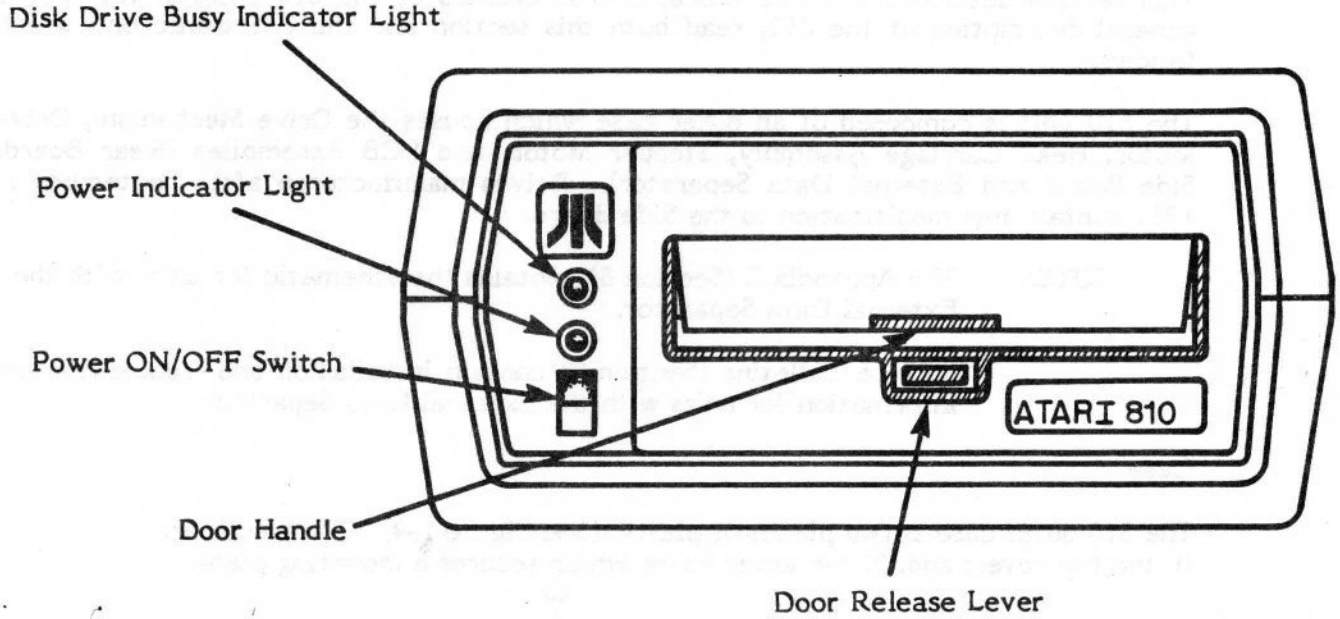

BACK PANEL

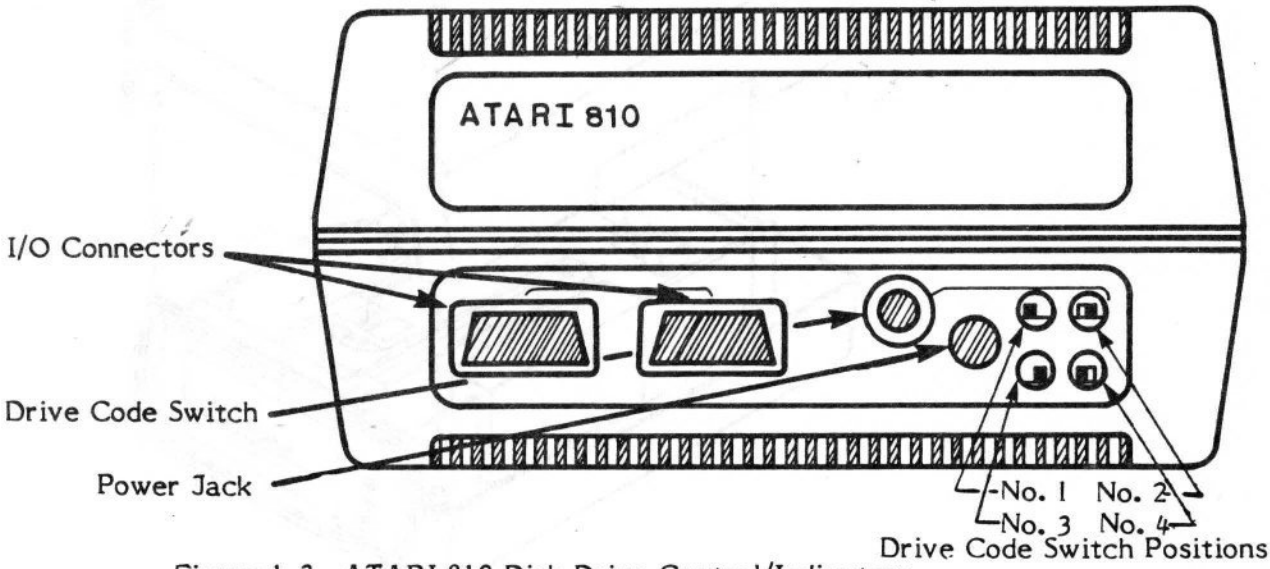

Figure 1-3. ATARI 810 Disk Drive Control/Indicators

MECHANICAL

This section describes the mechanical characteristics of the 810 Disk Drive. For a general description of the 810, read both this section and the Electronic one which follows.

The 810 unit is composed of an outer case which houses the Drive Mechanism, Drive Motor, Head Carriage Assembly, Stepper Motor, and PCB Assemblies (Rear Board, Side Board and External Data Separator). Drives manufactured after September 1, 1981 contain this modification to the Side Board.

NOTE: The Appendix B (Section 8) contains the schematic for units with the External Data Separator.

Service Bulletins (Section 9) contain installation and troubleshooting information for units with the External Data Separator.

Case

The 810 outer case is two pieces of plastic (See Figure 1-4). The pieces are: 1) the top cover; and, 2) the lower cover which secures a mounting plate.

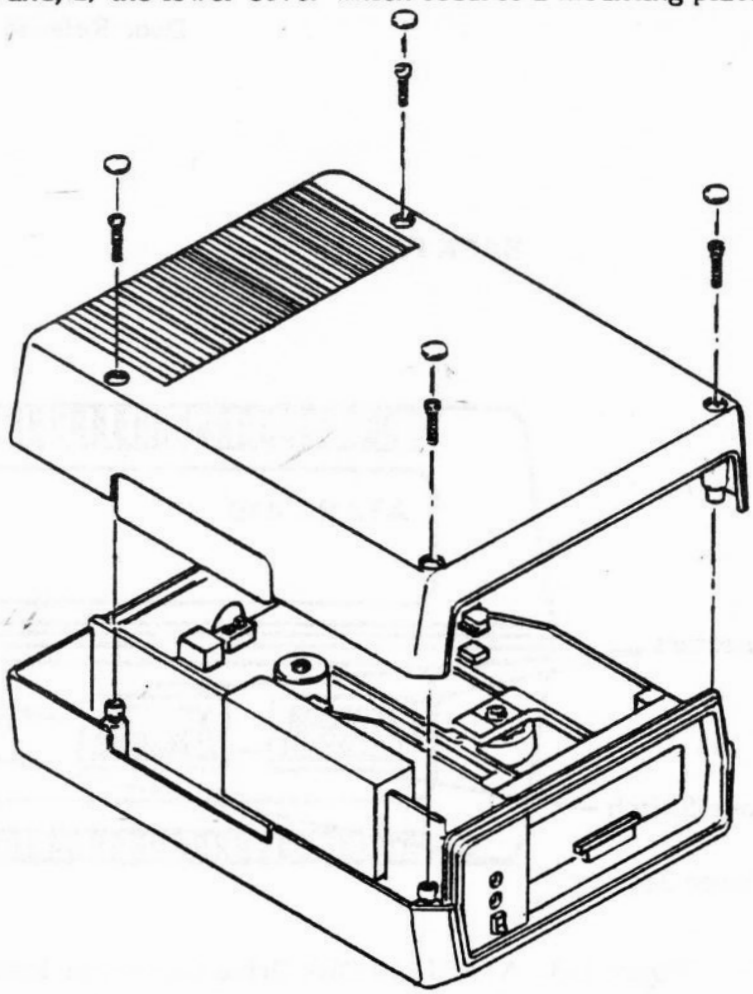

Figure 1-4. Disk Drive Outer Case

Figure 1-5 illustrates the mechanical elements of the 810 which are discussed in the following paragraphs.

Drive Mechanism

The Drive Mechanism provides mechanical and electronic linkage to the diskette. It is the physical assembly containing the Head Carriage Assembly, Drive Motor, Stepper Motor, and Write Protect sensor.

Head Carriage Assembly

The Head Carriage Assembly allows the head to be cycled across the diskette. It contains the Read/Write and Erase Head, the pressure pad and spring assembly.

Drive Motor

The Drive Motor is a DC motor which indirectly drives the diskette. It is attached by a drive belt to a flywheel which rotates the disk.

The DC motor includes an internal Tachometer, whose output is monitored in the Tach Feedback circuit. The Tach Feedback circuit senses changes in current and maintains a constant motor speed.

Light (LED) lites when power is turned on.

Stepper Motor

The Stepper Motor positions the head over a desired track. It is a four phase motor operating in a "two-phase on mode". Each change in phase rotates the Stepper Motor shaft. This circular motion is converted to linear motion by the positioning band/pulley assembly which links it to the head carriage.

The Stepper Logic is controlled by the PIA Chip. Four PIA signals act as the Stepper Motor's four phase inputs. These lines in various combinations, drive the Stepper Motor to reposition the Head Carriage Assembly from track to track.

PCB Assemblies (Rear Board, Side Board and External Data Separator)

The PCB Assemblies provide the connections for the logic circuits.

Rear Board

The Rear Board contains the power supply and all of the head Input/Output (I/O) support logic. The Rear Board is connected to the Drive Mechanism by the Drive Motor Harness (J103) and to the Head Carriage Assembly by the Head I/O Harness.

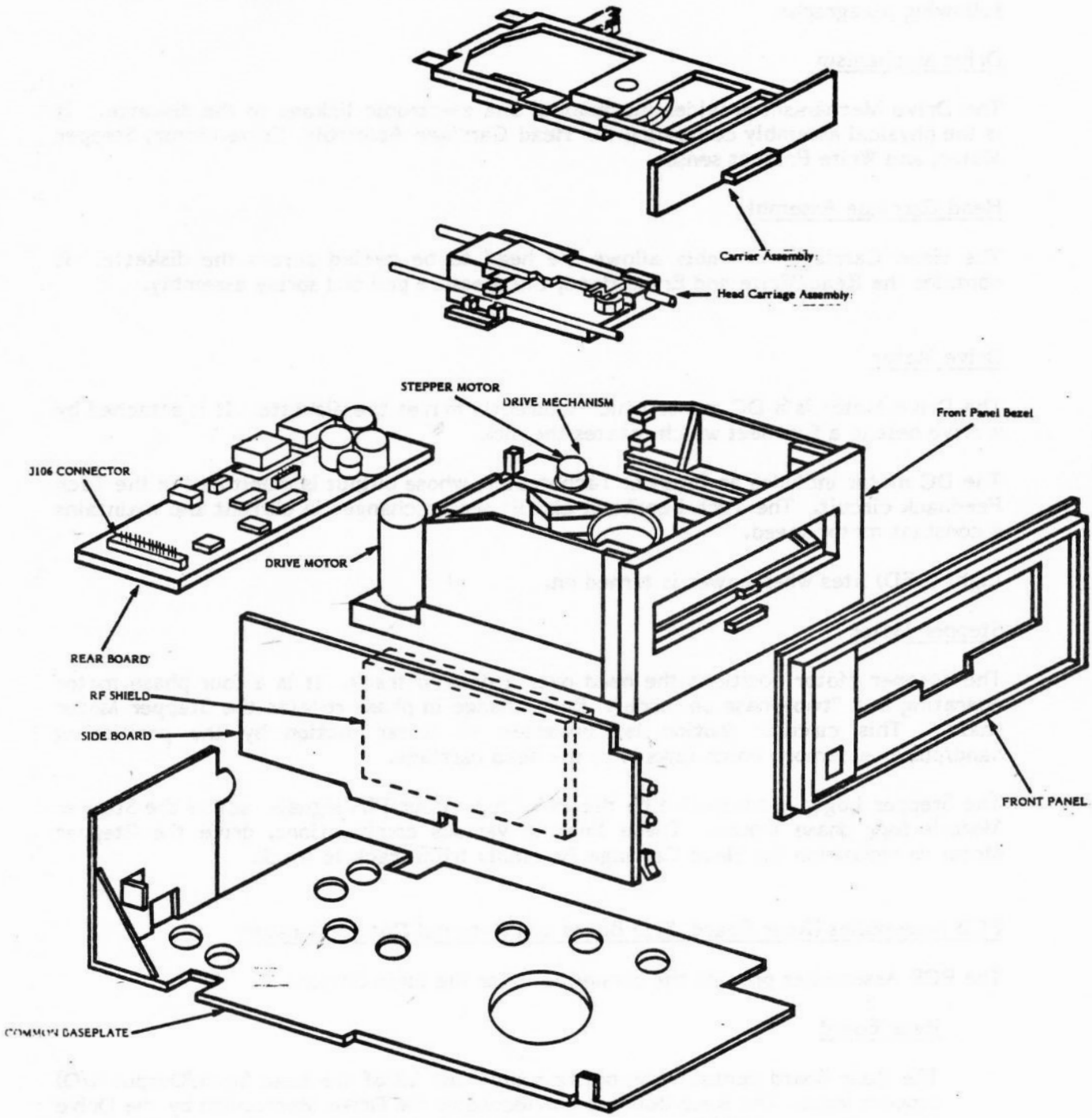

Figure 1-5. Disk Drive Mechanical Elements

Side Board

The Side Board processes all data, i.e., Commands, Data, Addresses, and Status.

It is connected to the Drive Mechanism by: 1) the Write Protect Wiring Harness; and, 2) the Stepper Motor Wiring Harness.

External Data Separator

NOTE: Units manufactured after September 1, 1981 contain an External Data Separator Board. If the unit you are servicing does not contain this modification on the sideboard, go to page 1-11.

The External Data Separator Board enhances the ability of the 1771 Floppy Disk Controller (FDC) to process data. It is installed in the Side Board where the FDC chip is usually installed.

POWER SUPPLY

The Power Supply provides the following voltages for use in the system:

+5VDC (regulated) which provides logic voltage.

+12VDC (regulated) which is used by the Floppy Disk Controller, Stepper Motor and Zero Crossing Detector

-5VDC (Zener regulated) which is used by the Floppy Disk Controller.

The 120VAC which comes into the system is stepped down to 9VAC by an External transformer (See Figure 1-6).

The 9VAC is applied to the bridge rectifier on the rear PCB when the Power ON/OFF switch is turned ON. An internal 2 amp fuse in the AC adaptor provides current limiting protection.

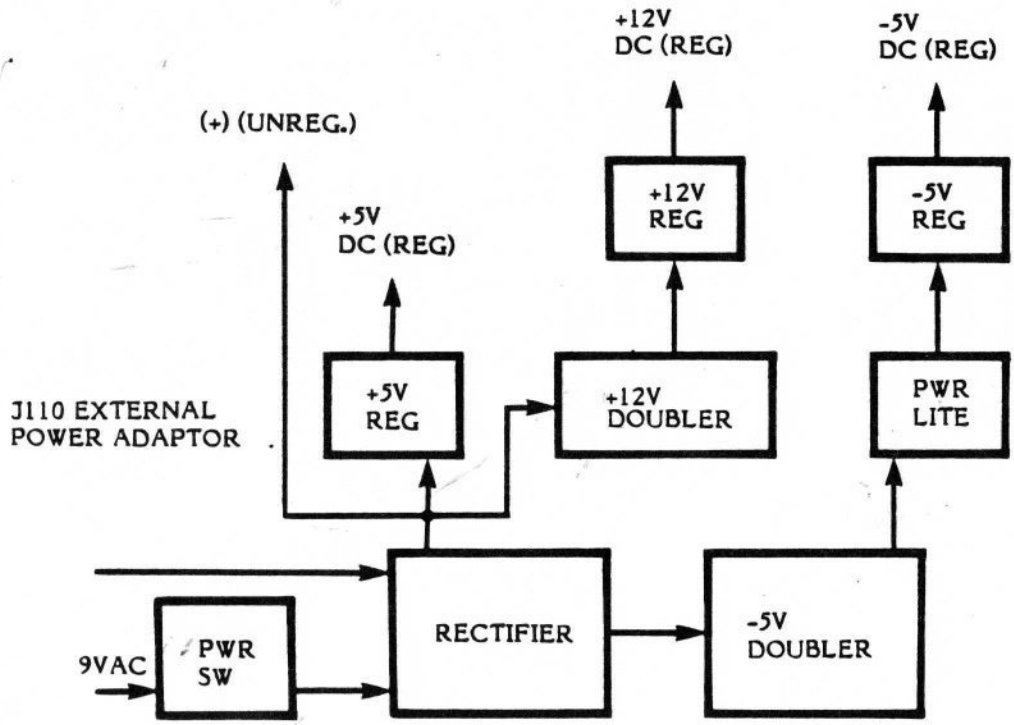

Figure 1-6. Power Supply Block Diagram

Power-up Logic

The Disk Drive's Power-up Logic resets the 6507 microprocessor, Peripheral Interface Adaptor (PIA) and Data Interface section (1771 FDC and Analog circuitry) whenever the drive is turned on. In addition, the power-up logic circuit locks the Data Output Buffer off during the short period when the drive is turned on. This prevents random pulses generated by the drive's circuitry (during the initialization period) from being sent to the console.

The RESET logic returns the electrical circuits to their starting conditions.

ELECTRONICS

The 810 Disk Drive Electronics consist of eight major elements. These include:

- Power-up Logic - discussed in the Power Supply section.

The remaining seven elements are discussed in the following paragraphs. These elements are:

- Clock
- 6507 Microprocessor Unit (microprocessor)
- Read-Only Memory (ROM)
- Random Access Memory (RAM)
- 6532 Peripheral Interface Adaptor (PIA)
- 1771 Floppy Disk Controller (FDC)
- Read/Write and Erase Logic

Figure 1-7 is a block diagram of the 810 Disk Drive Electronics.

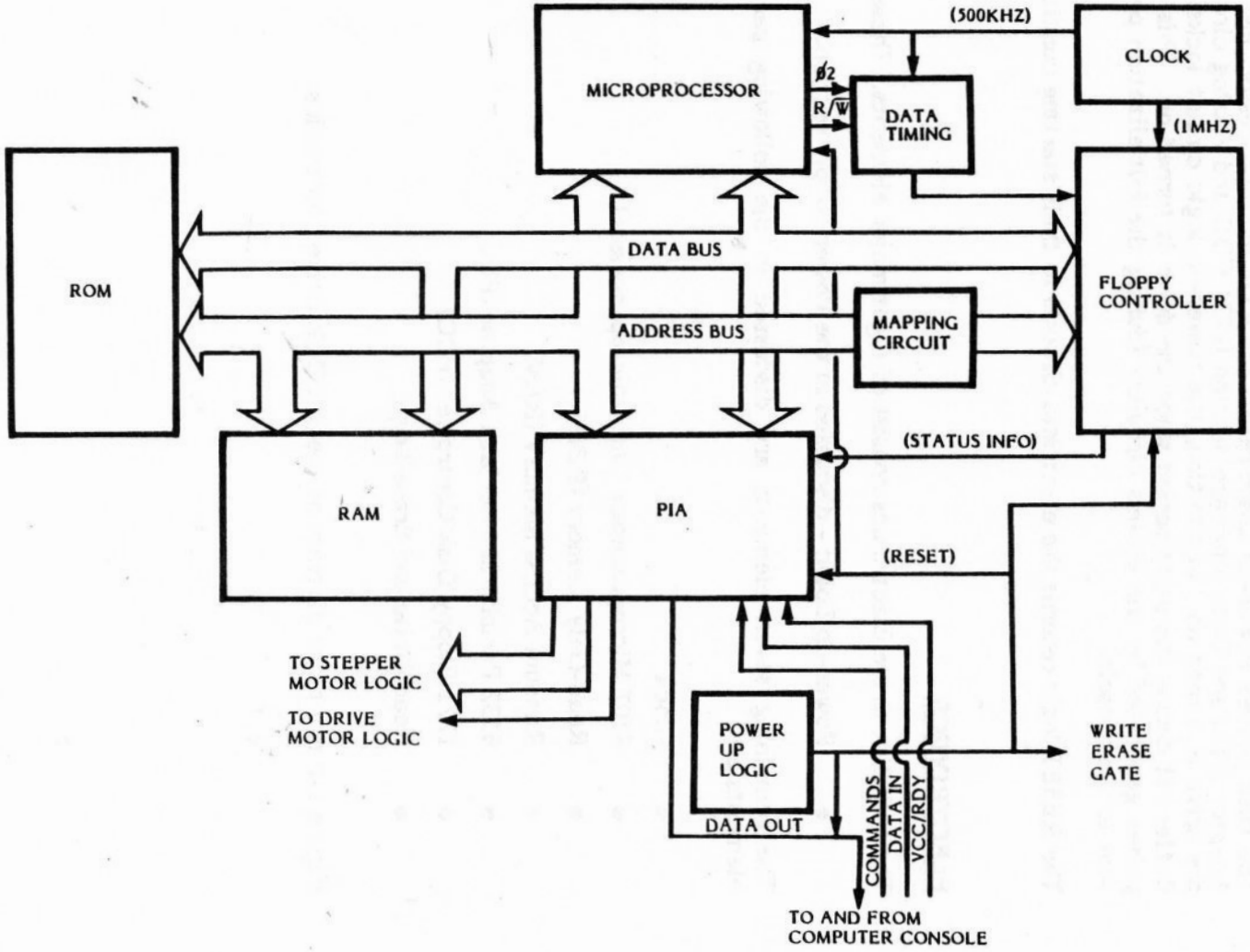

Figure 1-7. Disk Drive Electronics

Clock

The clock generator produces a continuous waveform which controls all signal transitions in the system. It provides timing controls for: 1) the 810 Disk Drive Logic; and, 2) the Read/Write operations to the diskette.

The drive's clock circuitry generates a crystal controlled 1 MHz and a 500 KHz signal. The 1 MHz signal is used by the 1771 Floppy Disk Controller (FDC) and the Write/Erase gate for data interface. The 500 KHz clock signal is used: 1) by the 6507 microprocessor; and, 2) to clock data into and out of the FDC.

6507 Microprocessor

The Disk Drive's 6507 microprocessor provides the primary decision making and computational capabilities for the drive. It is a self-contained microcomputer system on a single chip.

The microprocessor controls the sequence of system operations by putting addresses out to the program memory (ROM) and receiving instructions in return. It causes the system to perform the desired operation by reading an instruction (specific bit pattern) and executing that instruction. It then goes to the next instruction in the program and executes it.

The microprocessor:

- Controls data transfers through control of the common data and address buses.
- Monitors the Peripheral Interface Adaptor (PIA) for data transfers and status requests by the Computer Console.
- Provides control characters to notify the Computer Console of the status of operations performed and information received.
- Executes commands from the Computer Console.
- Controls the Stepper Motor Logic, Disk Drive Logic and Motor Logic, all of which are buffered in the PIA.
- Controls the 1771 Floppy Disk Controller (FDC).

The address bus, the bi-directional data bus, and the Read/Write line serve as parallel paths for data transfer in and out of the microprocessor and give it direct control over the central processing system. The address bus puts out addresses to control the source or destination of data transfers. The Read/Write line determines the direction in which data transfer occurs.

These addresses are derived from various sources within the microprocessor. During the instruction cycle from program memory (ROM), the addresses are usually derived from the program counter which controls the execution of sequential instructions. Addresses for data transfers between the microprocessor and RAM are usually derived from one of two sources: 1) directly from the program memory; or, 2) calculated by the microprocessor in the normal operation.

Read-Only Memory

The Disk Drive's Read-Only Memory (ROM) stores the sequence of instructions (program memory) that make up the 810's internal control software. It contains specific operating instructions used by the microprocessor to accomplish a variety of functions. These functions include telling the 1771 Floppy Disk Controller (FDC) what task to perform.

An important characteristic of the ROM chip is that the information is stored on a permanent basis. Turning OFF the power does not cause the loss of ROM information.

Random Access Memory (RAM)

The Disk Drive's Random Access Memory (RAM) is used by the microprocessor for temporary storage of input data, calculations and system information.

Data may be written into RAM as well as read from RAM by the microprocessor. The RAM identifies the type of data transfer by the Read/Write line. When the line is active high, the operation is to Read from memory and when the line is active low, the operation is to Write to memory. Turning the power OFF causes the loss of RAM information.

6532 Peripheral Interface Adaptor (PIA)

The 6532 Peripheral Interface Adaptor (PIA) is a buffering and signal formatting device with no decision making or computational capability. It is an Input/Output (I/O) device which acts as an interface between the 6507 microprocessor, the 810 system functions and the console.

The PIA:

- Applies the Console's serial outputs to the data and address buses when requested to do so by the drive's microprocessor unit.
- Provides 128 bytes of RAM for temporary storage of status information and data sent by the Data Interface section for application to the microprocessor.
- Monitors the 1771 Floppy Disk Controller.

- Acts as communication interface between the Computer Console and the microprocessor.

- Interfaces to the Stepper Motor Logic and Drive Motor Logic.

The microprocessor communicates with the PIA through eight data lines connected to the data bus. The microprocessor initiates communication by using its address lines to select or address the PIA.

The PIA provides 16 programmable bi-directional port lines to communicate with the Computer Console and perform the system functions. The port lines are divided into two 8-bit ports, PAO-PA7 and PBO-PB7. PA7 may also function as an interrupt input pin. The Interrupt Request (IRQ) line is used to inform the microprocessor when a device requires servicing.

1771 Floppy Disk Controller (FDC)

The 1771 Floppy Disk Controller (FDC) and the Read/Write and Erase Logic make up the Data Interface section which interfaces the Disk Drive's central processing system to the diskette.

The FDC is the main element of the Data Interface section. The FDC is a highly specialized microprocessor which has an arithmetic logic unit, comparator, and the necessary microprogram logic to control the Read/Write operation to the diskette.

The FDC:

- Combines data, timing, and data validity pulses into the serial format for recording onto diskette.

- Separates the above signals and provides the output data in parallel during a read operation.

- Controls the Write and Erase logic circuitry during a Write operation.

- Generates the data validity codes (called Cyclic Redundancy Checks or CRCs) during a write operation, and checks them during a read operation.

The microprocessor controls the FDC and can access any of the following registers located in the FDC: Track, Sector, Data, Command, and Status. Refer to Table 1-1 for a description of the contents of each register.

TABLE 1-1

FDC REGISTERS/CONTENTS

Register	Contents
Track	Current head address. Updated automatically as the head moves across the diskette.
Sector	Number of the sector being considered for a read or write operation.
Data	Information read from the diskette to be transferred to the microprocessor after the necessary serial-to-parallel conversion. The FDC receives data in parallel from the microprocessor and converts the data to serial for storage on the diskette.
Command	Instructions from the microprocessor which are interpreted by an internally controlled programmable logic array to generate the appropriate control signals for the logical operation to be performed.
Status	Condition of the system. After each command is executed, the control logic issues an interrupt to the microprocessor to allow examination of the status register for any errors before resetting the interrupt. Each of the eight bits in the staus register represents a different error condition.

The Floppy Disk Controller chip accesses data lines and provides data in bit complement form (1 for 0 and 0 for 1). The inversion is performed by the FDC firmware.

The FDC controls the following elements of the Data Interface section:

- Write/Erase Logic
- Write Protect Logic
- Read Logic
- Read/Write Head
- Erase Head

Write/Erase Logic

The Write/Erase Logic is used to record data from the Floppy Disk Controller to the diskette. It provides correct current and polarity to the Read/Write Head. (See Figure 1-8 for a block diagram of the Write/Erase Logic.) Table 1-2 describes the elements used in the Write/Erase Logic.

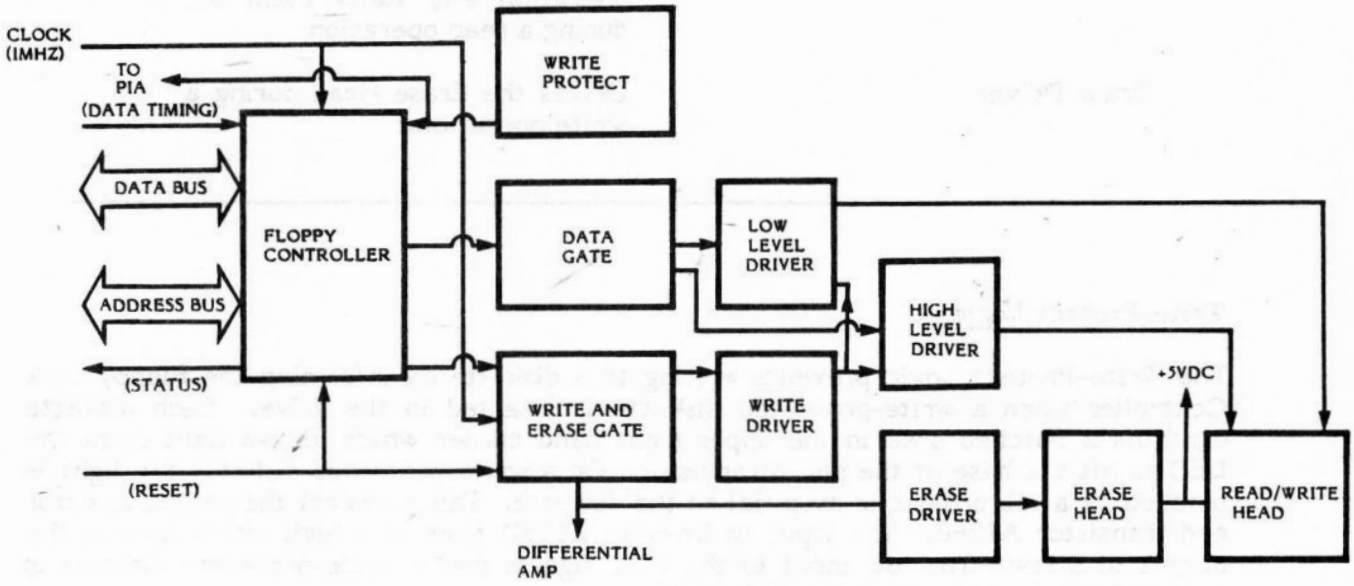

Figure 1-8. Write/Erase Logic Block Diagram

TABLE 1-2

WRITE/ERASE LOGIC

Element	Function
Data gate	Converts the leading edge of the clock and data pulses into a single corresponding logic level.
High and Low Level Drivers	Determines the direction of current flow through the Write/Erase head.
Write Driver	Enables the High/Low Level Drivers and limits the write currents.
Write and Erase Gate	Turns on both the Write and Erase Drivers during a write operation and turns them off during a read operation
Erase Driver	Drives the Erase Head during a write operation.

Write-Protect Logic

The Write-Protect Logic prevents writing to a diskette by informing the Floppy Disk Controller when a write-protected diskette is inserted in the drive. Each diskette contains a notched area in the upper right hand corner which allows light from the LED to hit the base of the phototransistor. On a write-protected diskette the light is blocked by a tab or opaque material on the diskette. This turns off the phototransistor and transistor A106E. The input to inverter Z103D rises to a high which inverts the output to a low. The low input to the FDC signals that a write-protected diskette is inserted and the diskette is not written to.

Read Logic

The Read Logic is used to retrieve data from the diskette and input the data into the FDC. It shapes pulses into the correct format to be read by the FDC. (See Figure 1-9 for a block diagram of the Read Logic.) Table 1-3 describes the Read Logic Elements.

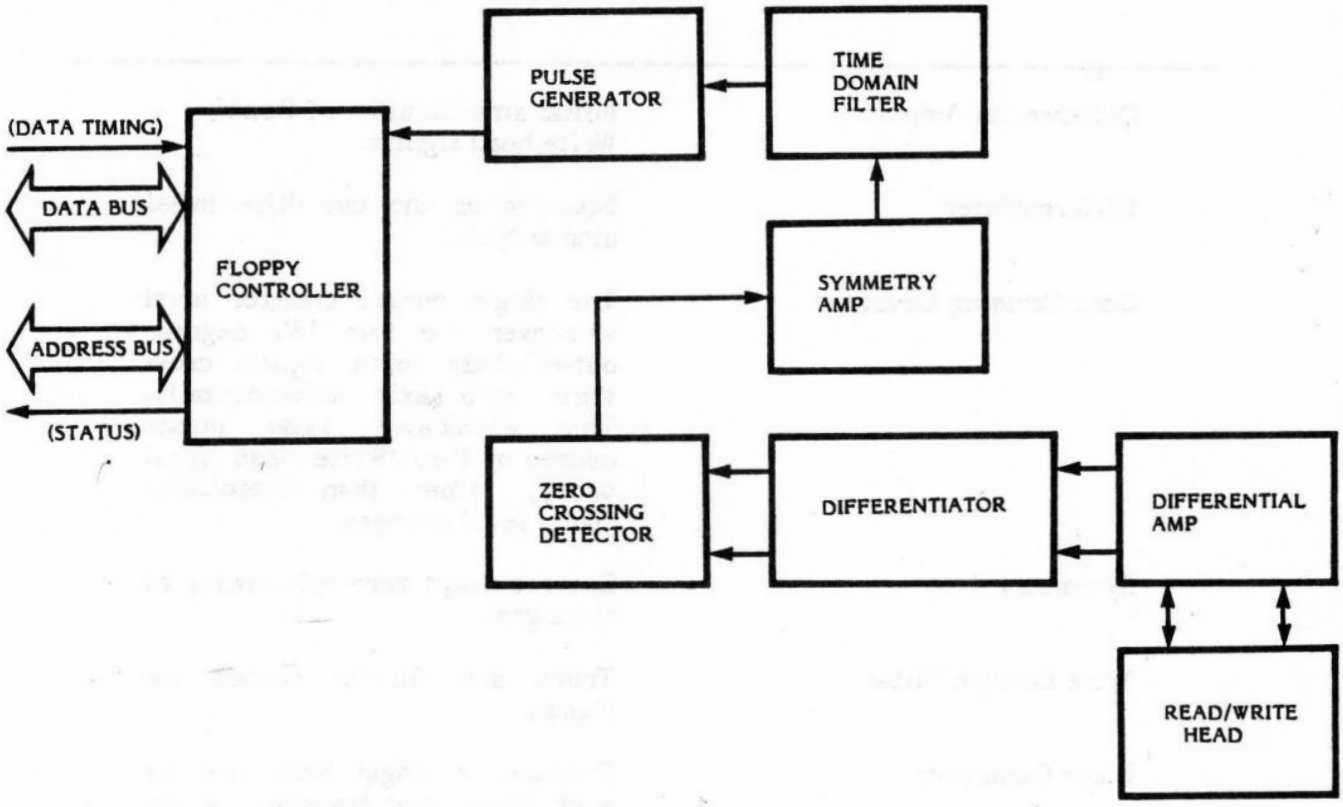

Figure 1-9. Read Logic Block Diagram

TABLE 1-3

READ LOGIC ELEMENTS

Element	Function
Differential Amp	Initial amplification of Read/ Write head signals.
Differentiator	Squaring up the two differential amp outputs.
Zero Crossing Detector	The single output changes level whenever the two 180 degrees out-of-phase input signals cross their zero axis coincidentally. This eliminates false pulses caused by Read/Write Head signal decay, rather than intentional signal level changes.
Symmetry Amp	Ensures exact zero referencing of the signal.
Time Domain Filter	Trims and further shapes the signal.
Pulse Generator	Produces a single pulse out for each logic level transition at its output. This results in the reproduction of the original FDC signal.

Read/Write Head

The Read/Write Head is an electro-magnetic device used for interfacing with the magnetic recording media. It converts magnetic flux changes to electric current, and vice versa, through the use of a center tapped coil.

Current is passed through the windings on the head core. Data is written to the diskette surface by changing the direction of the current through the Read/Write Head. (Each flux change equals a data bit.)

Data is read from the diskette when signals from the head coil windings are applied to the differential amplifier.

Erase Head

The Erase Head creates a guardband (a blank space between tracks) in order to prevent one recorded track from interfering with either the next inner or next outer track.

It straddles the Read/Write Head in such a way that after the data is written onto the diskette, the Erase Head "tunnel" narrows the track width, leaving guardbands between tracks (See Figure 1-10).

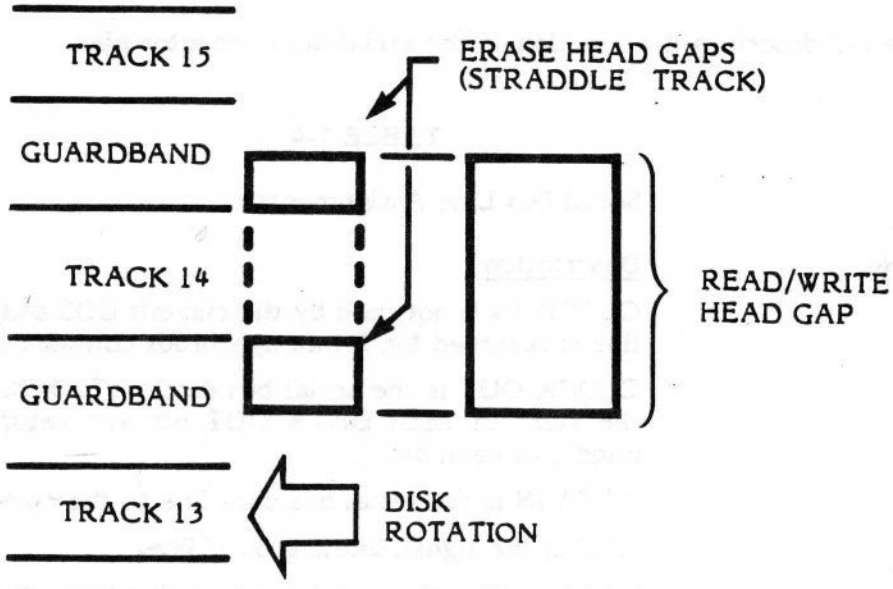

Figure 1-10. Erase Head Gaps

SERIAL BUS LINE ASSIGNMENTS

The computer communicates with peripheral devices over a serial port which consists of a serial DATA OUT (transmission) line, a serial DATA IN (receiver) line and miscellaneous control lines.

Data is transmitted and received as 8 bits of serial data (least significant bit sent first) preceded by a logic zero start bit and succeeded by a logic one stop bit. The serial DATA OUT is transmitted as a positive logic (+4v = one/true/high, Ov = zero/false/low). The serial DATA OUT line always assumes its new state when the serial CLOCK OUT line goes high; CLOCK OUT then goes low in the center of the DATA OUT bit time.

Table 1-5 describes the function of the serial bus connector pins.

TABLE 1-4

Serial Bus Line Assignments

Pin No.	Description
1	CLOCK IN is not used by the current DOS and peripherals. This line is reserved for future synchrous communications.
2	CLOCK OUT is the serial bus clock. CLOCK OUT goes high at the start of each DATA OUT bit and returns to low in the middle of each bit.
3	DATA IN is the serial bus data line to the computer.
4	GND is the signal/shield ground line.
5	DATA OUT is the serial bus data line from the computer.
6	GND is the signal/shield ground line.
7	COMMAND is normally high and goes low when a command frame is being sent from the computer.
8	MOTOR CONTROL is the cassette motor control line (high=on, low=off).
9	PROCEED- is not used by the current DOS and peripherals. This line is pulled high passively inside the 800.
10	+5v/READY indicates that the computer is turned on and ready. This line may also be used as a +5 volt supply of 50 ma. current rating for Atari peripherals only.
11	AUDIO IN accepts an audio signal from the cassette.
12	+12v supply for Atari peripherals only.
13	INTERRUPT- is not used by the current DOS or peripherals. This line is pulled high passively inside the 800.

There are no pin reassignments made in the serial bus cable, so pin 3, the computer's DATA IN line, is the peripheral's data output line; and similarly for pin 5.

SERIAL BUS ELECTRICAL SPECIFICATIONS

Peripheral Input:	VIH = 2.0v minimum VIL = 0.4v maximum IIH = 20uA maximum at VIH = 2.0v IIL = 5uA maximum at VIL = 0.4v
Peripheral Output (open collector bipolar):	VOH = 4.5v minimum with external 100K ohm pull-up VOL = 0.4v maximum at 1.6 mA
Vcc/READY Input:	VIH = 2.0v minimum at IIH = 1ma maximum VIL = 0.4v maximum Input goes to logic zero when open

SERIAL BUS PROTOCOL

When a command line goes low, the computer console sends a command frame to all devices. The command provides the disk drive with the following information:

- Serial Bus Device ID
- Command
- Two bytes of auxiliary information
- Checksum.

The commands supported by the disk controller are: Get Sector, Put Sector, Put Sector with Verify, Status Request, and Format disk.

SECTION 2

SILKSCREENS AND SCHEMATICS

On the following pages are representative silkscreens and schematics for the ATARI 810 Disk Drive. Minor variations in design may be encountered depending on the production date of the unit, but these schematics provide all details required for an in-depth understanding of all 810 Disk Drive units.

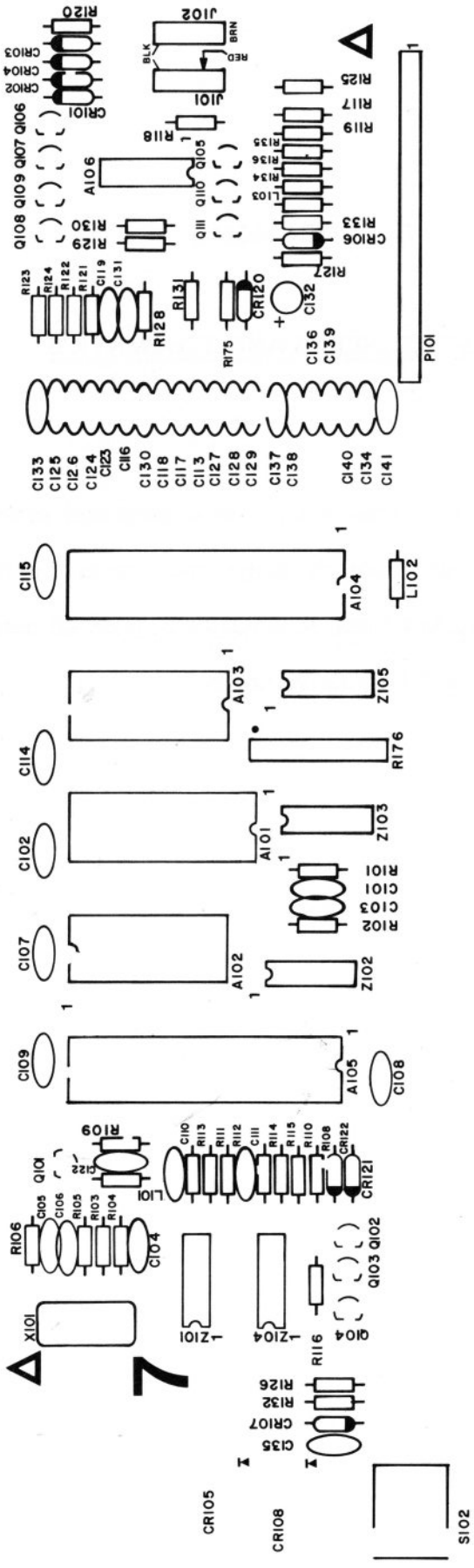

810 Side Board Silkscreen

Figure 2-1

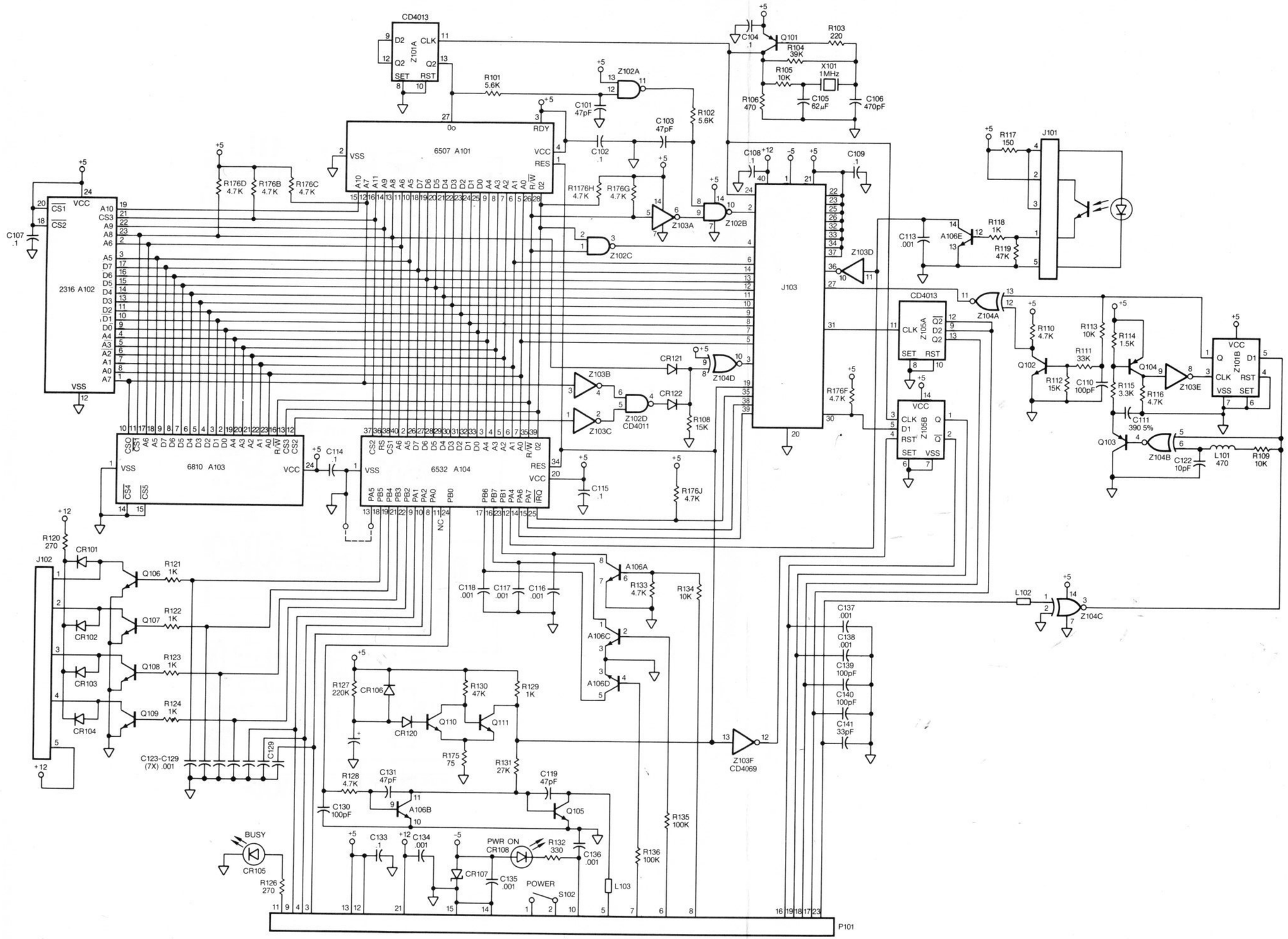

ATARI 810 Disk Drive

810 Side Board Schematic

Figure 2-2

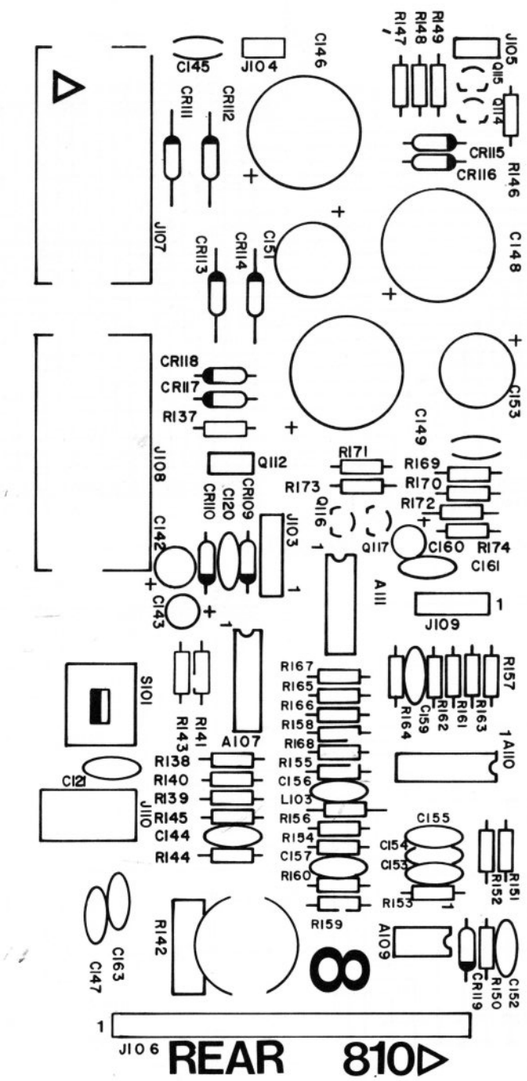

810 Rear Board Silkscreen

Figure 2-3

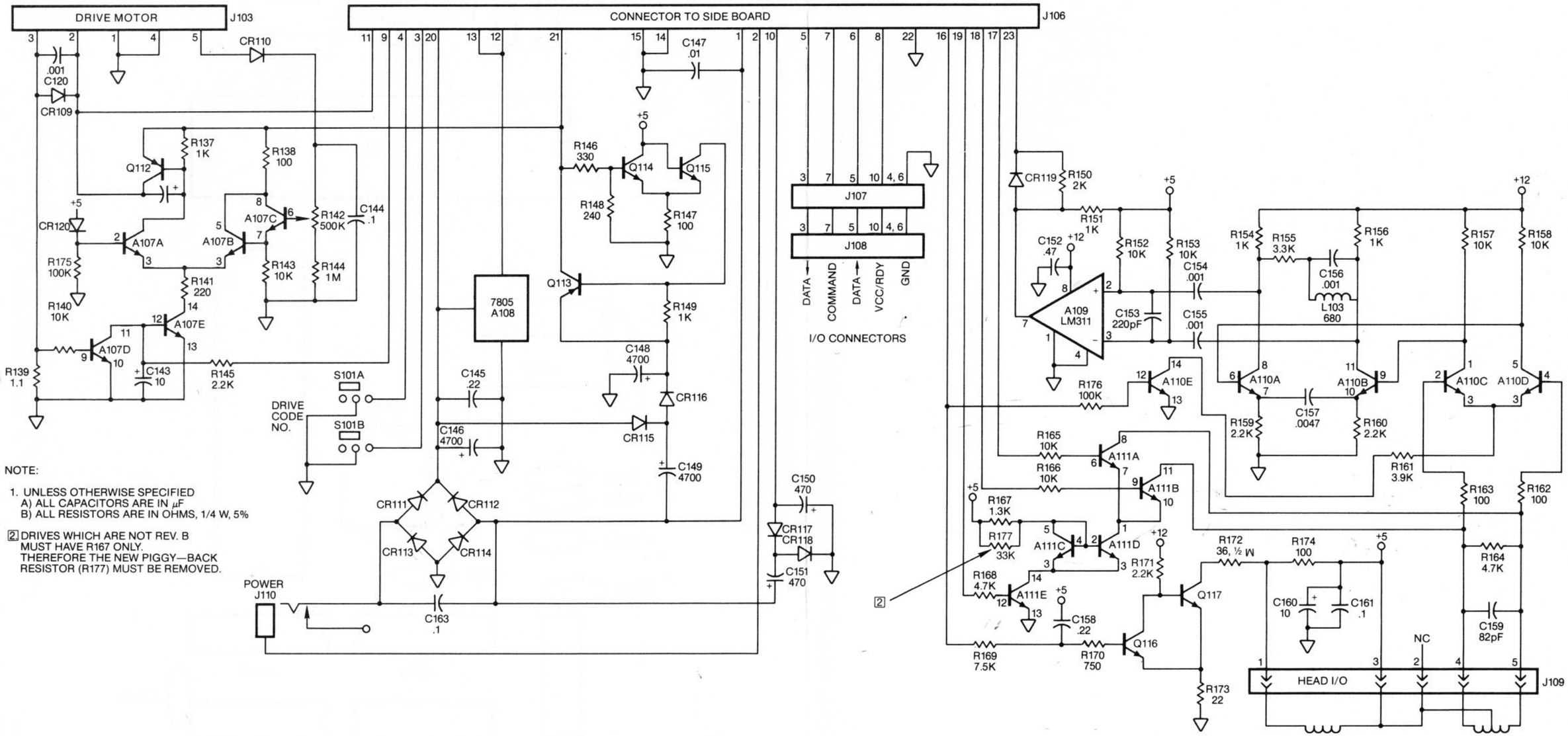

NOTE:

1. UNLESS OTHERWISE SPECIFIED
   A) ALL CAPACITORS ARE IN μF
   B) ALL RESISTORS ARE IN OHMS, 1/4 W, 5%

2 DRIVES WHICH ARE NOT REV. B MUST HAVE R167 ONLY. THEREFORE THE NEW PIGGY—BACK RESISTOR (R177) MUST BE REMOVED.

810 Rear Board Schematic

Figure 2-4

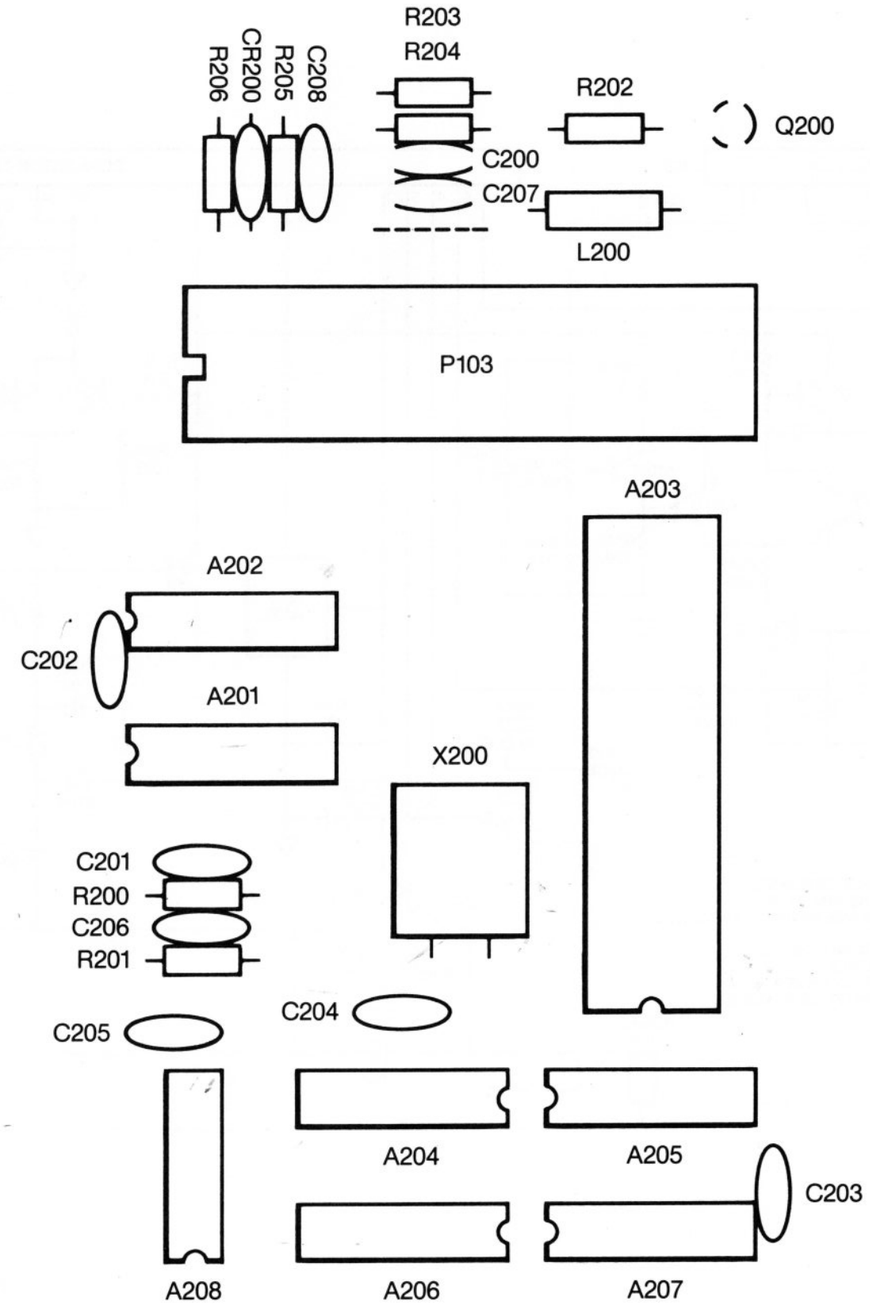

Data Separator Silkscreen

Figure 2-5

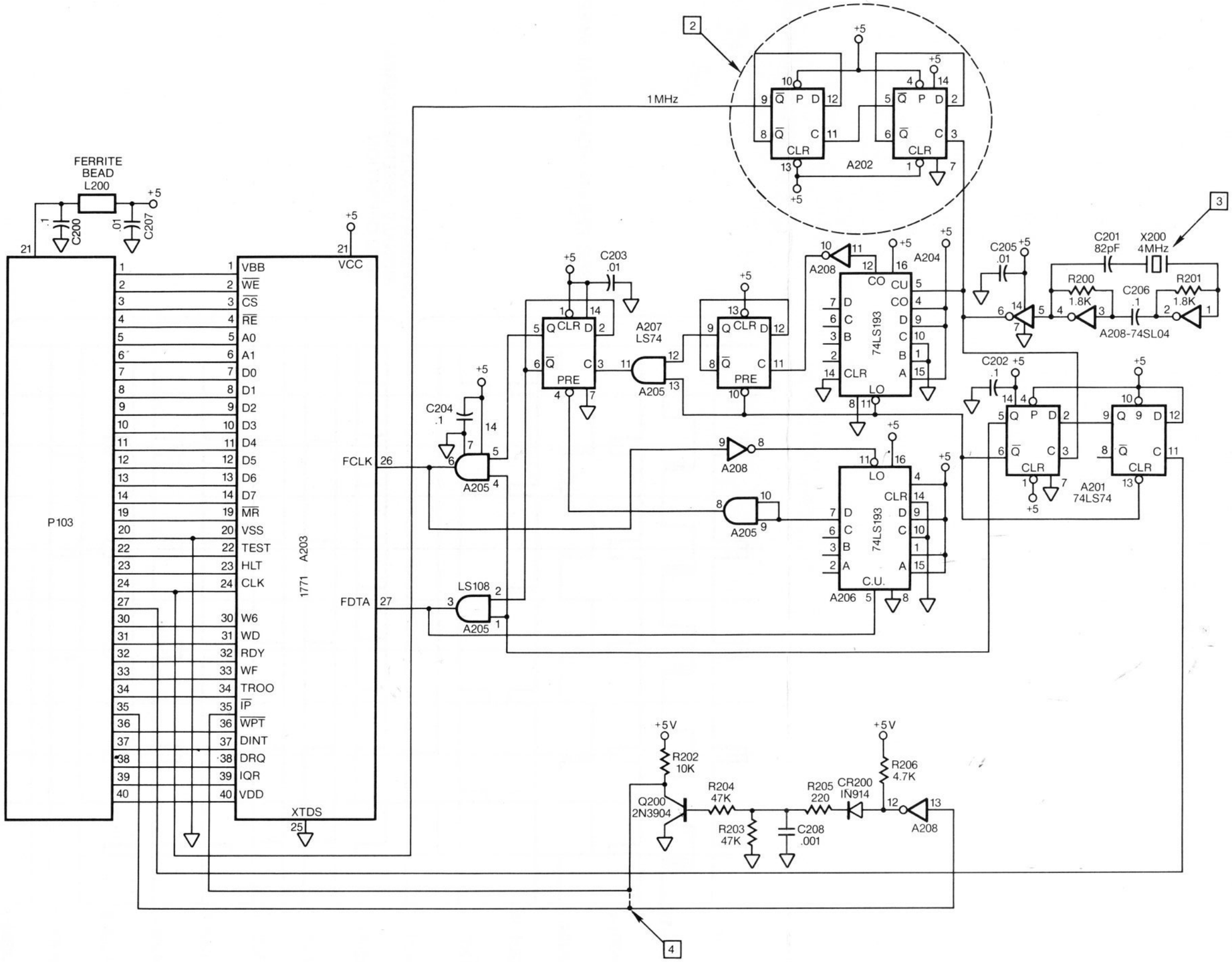

NOTES:

1. UNLESS OTHERWISE SPECIFIED
   A) ALL CAPS ARE IN μF.
   B) ALL RESISTORS ARE IN OHMS.
2. USED TO SUPPLY 1MHz CLOCK TO SIDEBOARDS. THIS APPLIES ONLY WHEN 1MHz OSC. NOT ASSEMBLED ON SIDE BOARD.
3. CRYSTAL = 4MHz ± 0.1%
   CIRCUIT = 4MHz ± 0.5%
4. JUMPER TO BY-PASS PULSE STRETCHER (NORMALLY NOT INSTALLED).

Data Separator Schematic (A)

Figure 2-6A

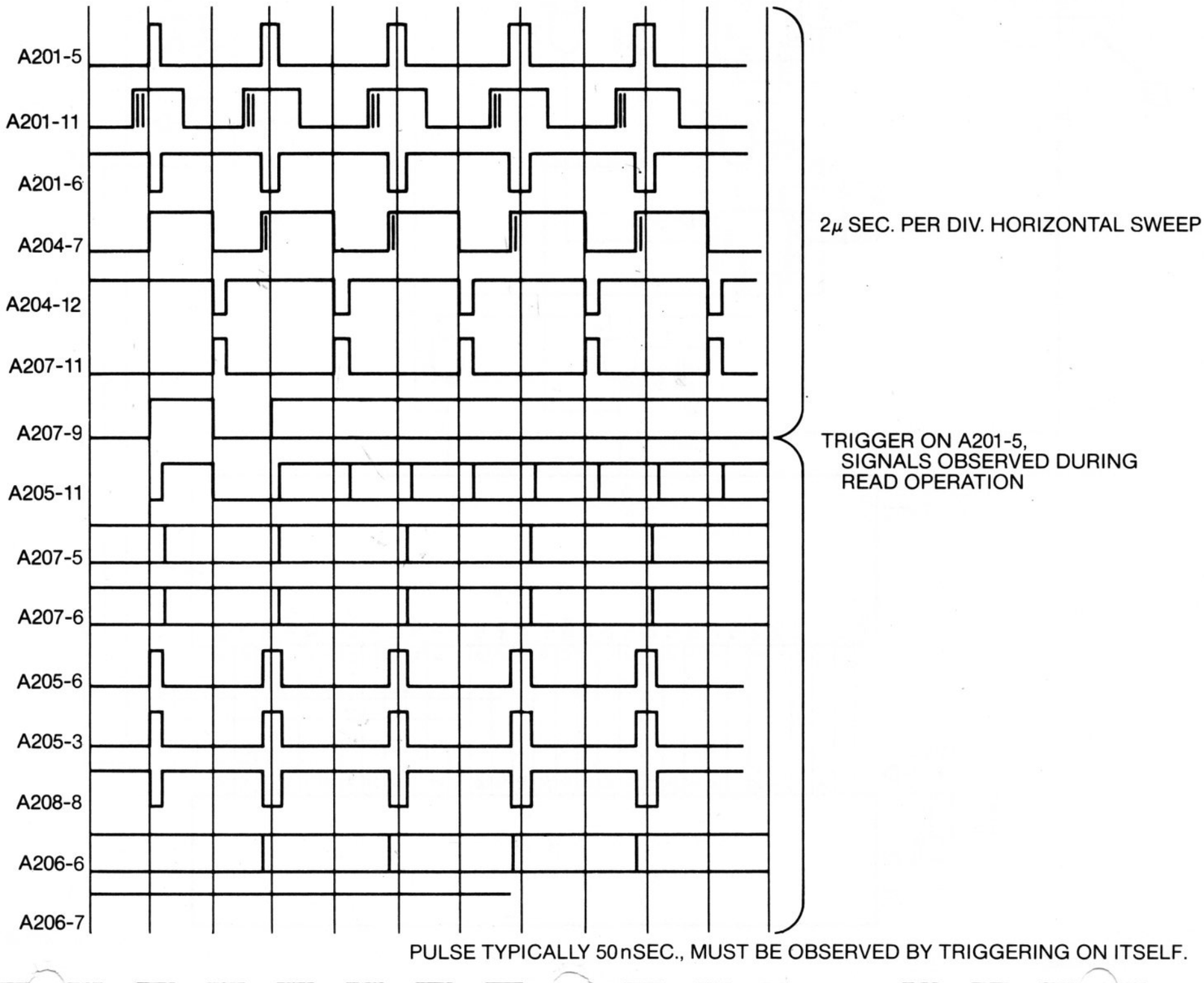

Figure 2-6B Data Separator Schematic (B)

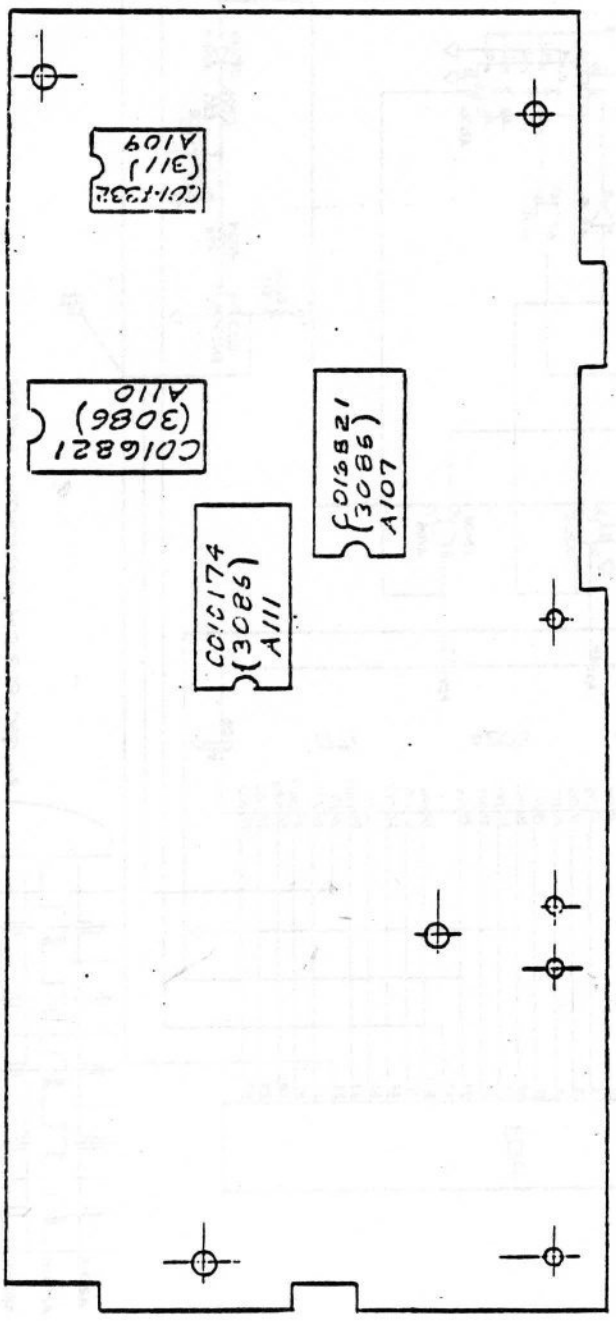

Figure 2-6 I.C. Component Placement 810 Rear Board

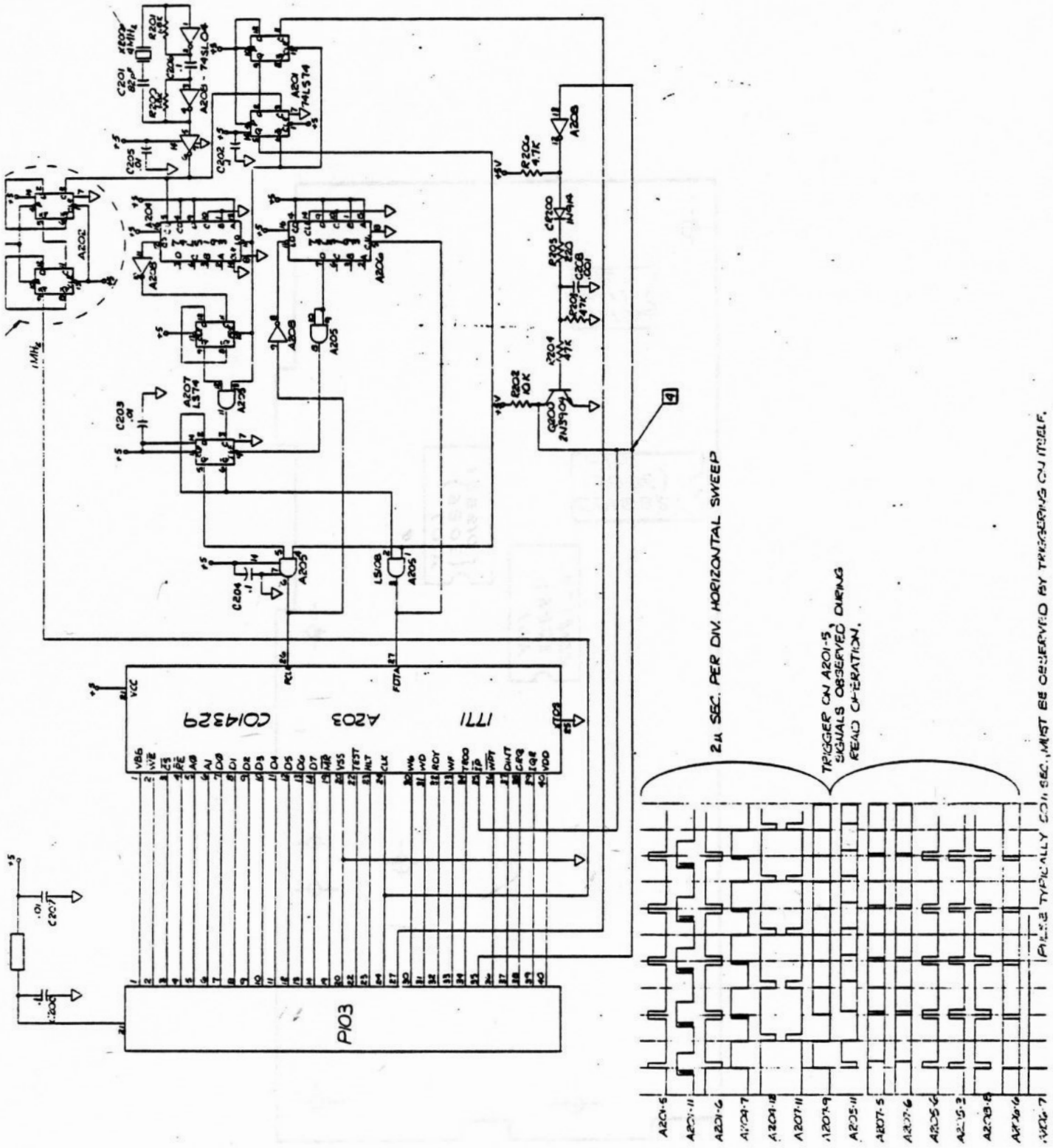

Figure 2-7.Data Separator Schematic

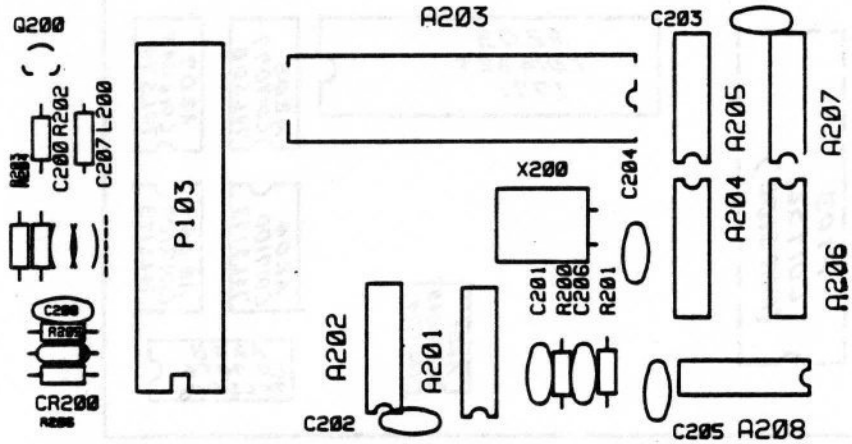

Figure 2-8. Data Separator Silkscreen

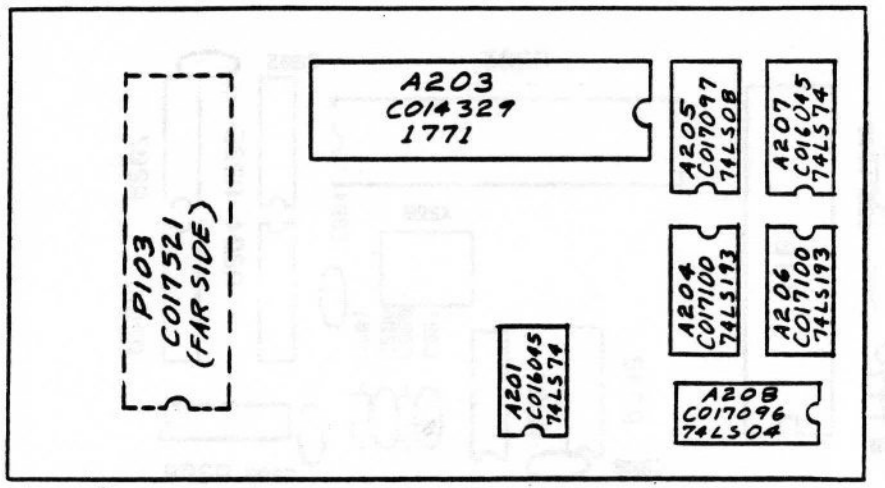

I.C. COMPONENT PLACEMENT
(COMPONENT SIDE)

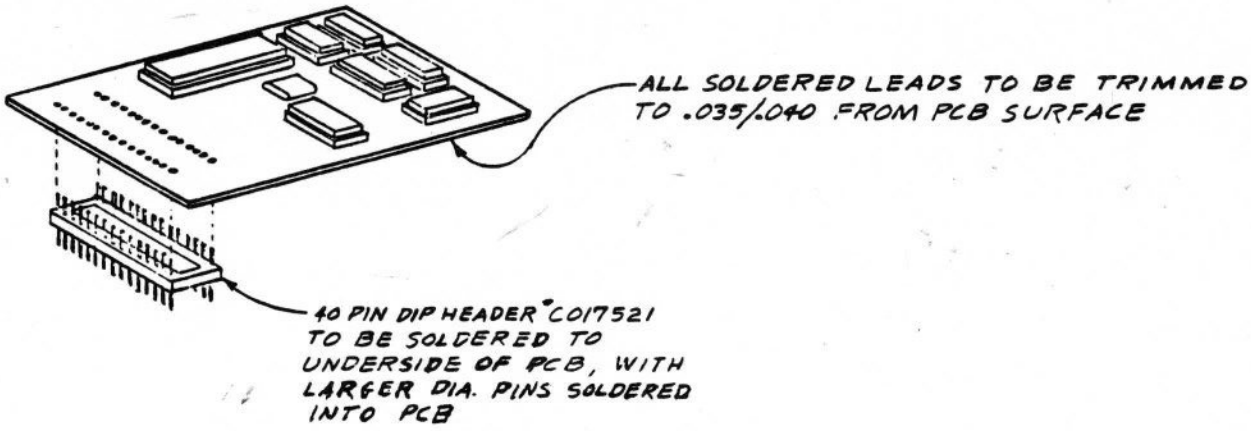

Figure 2-9. Data Separator I.C. Component Placement

SECTION 3

TEST EQUIPMENT/DIAGNOSTIC TESTS

EQUIPMENT REQUIREMENTS:

You will need 14 basic pieces of equipment in order to analyze failures in the ATARI 810 Disk Drive. These items include:

- an ATARI 400 computer with 16K RAM
- a TV, properly adjusted
- a 15 MHz oscilloscope A+B mode, channel B invert
- a Digital Voltmeter
- a Frequency Counter
- a CPS 810 Diagnostic Cartridge
- an Alignment Diskette
- a Master Diskette
- a blank diskette
- an Atari pre-formatted diskette (P/N CX8101)
- a .050 inch Hex Driver
- assorted small tools
- an Atari 820, 822 or 825 Printer (optional)
- .010 feeler gauge

HOOK-UP

Set up Disk Drive and computer according to procedures in 810 Disk Drive Operators Manual, Page 2.

To avoid intermittent failures, be certain all connections are secure.

CHECK OF MECHANICAL COMPONENTS

Before testing the unit, check to be certain these mechanical components are functioning properly:

- o Check that the door handle clicks when it is closed.
- o Check that the door opens when the door release lever is pressed and that the diskette is ejected if there is one in the drive.

PREVENTIVE MAINTENANCE/PRECAUTIONS

NOTE: Each unit which is disassembled must have Preventive Maintenance performed. See Section 6, Disassembly/Assembly for a summary of precautions and preventive maintenance instructions.

DIAGNOSTIC TESTS

The tests in this section are intended to assist you in diagnosing possible problems in the 810 Disk Drive. All Diagnostic Tests are reviewed in this section. Use it to familiarize yourself with each test. Section 4, Diagnostic Flowcharts, indicates when these tests are to be used during troubleshooting.

The Diagnostic Tests available are:

- o Power-up Test (observation of unit in operation)
- o Burn-In Test (uses CPS 810 Diagnostic Cartridge)
- o DOS Verification Procedure (uses blank diskette)
- o Alignment Program (uses CPS 810 Diagnostic Cartridge)

POWER-UP TEST

Purpose: To test the Disk Drive's Electronic Hardware Initialization and Reset. This test prepares the drive for the testing. The drive must pass this test before other tests are performed.

Special Tools Required: None

Procedure:

1. Connect Disk Drive to computer (Page 1-3).
2. Turn the Disk Drive power switch on.
3. Observe that the following occurs.
   a. The Power LED lights.
   b. The Busy LED lights.
   c. The Drive Motor turns on.
   d. The Head Carriage steps to track 0 (outer track).
   e. Seven seconds pass, then the head carriage steps to track 39 (inner track) and the Drive Motor turns off.
4. This completes the Power-up Test.

BURN-IN TEST

Purpose: To test the Disk Drive's Read/Write accuracy, Track Alignment, speed adjustment and compatibility. Burn-In is used as both an incoming test and as a final test criteria.

Special Tools Required:

- o Atari CPS 810 Diagnostic Cartridge
- o One Atari preformatted diskette (P/N CX8101) for each drive to be tested.

- o TV, properly adjusted
- o One Atari 820, 822 or 825 Printer (optional)

NOTE: **Hard copy is useful for diagnosing problems discussed in the flowcharts.** You must use a printer when burning-in more than one unit to avoid losing data due to display scrolling.

Procedure:

1. Connect printer (optional) and TV to the computer and plug in AC adaptor for each.

2. Set Disk Drive code switch at correct position for (each) drive to be tested. Be sure Power is **OFF** when setting switch positions.

3. Connect (1-4) drives to computer and plug each one in. (810 Disk Drive Operators Manual, Page 3).

4. Power up Disk Drive(s), TV and printer (optional).

5. Insert CPS 810 Diagnostic Cartridge in the computer.

6. Power up the computer. The screen displays a menu of the diagnostic tests available.

7. Select Burn-in Test.

8. Follow the screen prompts as they appear.

9. The printout begins if a printer is connected and turned on.

10. Insert the Atari pre-formatted diskette(s) in the disk drive(s).

11. Press the **RETURN** key and the screen displays:

    DRIVE 1 ONLINE or OFFLINE
    DRIVE 2 ONLINE or OFFLINE
    DRIVE 3 ONLINE or OFFLINE
    DRIVE 4 ONLINE or OFFLINE

12. Testing begins. The screen displays Testing Drive X/single density writing sector - XXX.

    "DRIVE X" represents the first drive that is on-line and **"SECTOR -XXX"** represents the sector being written.

13. When all sectors are written, the test diskette is read and the screen displays:

    READING SECTOR - 0C1E (TYP)

14. At the end of the testing, the word **PASS** will be printed on the printer and on the screen.

15. One pass takes approximately ten minutes. Each drive makes ten passes for approximately 1 3/4 hours of testing.

16. When the test is complete on drive 1, the word **DONE** is printed on the printer and on the screen.

17. Drive number 2 is tested next, then drive 3 and 4, or the next drive that is on-line.

18. After drive 4 has completed its testing, the header is displayed and the test stops, waiting for the **RETURN** key to be pushed and new drives to be tested.

19. Any errors display on the screen and the printer. Any error rejects a drive.

20. The **BREAK** key can be used to stop the testing during the READ or WRITE section.

21. After a maximum of five errors, testing is automatically halted on that drive and the next drive begins testing.

22. This completes the Burn-In Test.

23. Accept drives that have run error-free and put printout (if available) with drive.

24. Reject drives with one error and more.

TYPICAL RUN LISTING

ATARI 810 BURN-IN DISK TEST
REV. E.

DRIVE 1 ONLINE

DRIVE 2 ONLINE

DRIVE 3 ONLINE

DRIVE 4 ONLINE

ATARI 810 BURN-IN DISK TEST
REV. E.

TESTING DRIVE 1/SINGLE DENSITY

WRITING SECTOR - 02B5
FAIL - STATUS 90 DEVICE DONE ERROR

PATTERN - 92
PASS 01
10:29

WRITING SECTOR - 02C3
FAIL - STATUS 90 DEVICE DONE ERROR

WRITING SECTOR - 02B9
FAIL - STATUS 90 DEVICE DONE ERROR

PATTERN - 49
PASS 02
10:46

PATTERN - 55
PASS 03
10:32

WRITING SECTOR - 02C1
FAIL - STATUS 90 DEVICE DONE ERROR

PATTERN - AA
PASS 04
10:41

PATTERN - FF
PASS 05
10:36

ATARI 810 BURN-IN DISK TEST
REV. E.

DOS VERIFICATION PROCEDURE

Purpose: To test the disk calibration in the user environment. Verifies that the drive can format, write and read the Disk Operating System (DOS) by re-booting DOS and executing it. Use this test only after the Power-up test has been successfully completed.

Special Tools Required:

- o Master Diskette (DOS)
- o Blank Diskette

Procedures:

NOTE: No Cartridge is required in the computer for this test.

1. Connect TV and Disk Drive to computer.

2. Power-up the Disk Drive and TV.

3. When the Disk Drive Busy Indicator Light (LED) goes OFF, insert the Master Diskette into the Disk Drive and close the door.

4. Turn on the computer and the system automatically "boots" DOS from the Master Diskette.

5. The screen displays the DOS menu.

6. Remove the Master Diskette from the drive.

7. Insert the blank diskette and close the Disk Drive door.

8. Press **I** and RETURN to format diskette.

9. The screen prompts **"Which Drive To Format?"** Type 1 to select disk drive number 1 and press **RETURN.**

10. TYPE **Y** to specify yes to formatting disk drive number 1 and press **RETURN.** The DOS formats the diskette. This takes approximately 35 seconds. When the operation is complete, the screen prompts **"Select Item".**

11. Type **H** to write DOS on the new diskette and press RETURN.

12. Type **Y** to specify yes to copying the DOS on the new diskette and press RETURN. When the operation is complete, the screen prompts **"Select Item".**

13. Power the computer down by turning the ON/OFF switch OFF. Then turn the computer back on.

14. The screen should display the DOS menu at the completion of the Power-up sequence. This indicates the newly written- to diskette operates properly.

15. This completes the DOS Verification procedure.

ALIGNMENT PROGRAM

Purpose: To check and adjust speed, pad pressure and track alignment. This test also verifies head azimuth. This is a control program which positions the head carriage assembly at tracks 00, 01, 16, 32, 33 and 34. Each track has an analog signal on it which is used to display a specific waveform.

Special Tools Required:

- o 15 MHz oscilloscope A+B mode, channel B invert
- o 2 scope probes (if using X10 probes, be sure to compensate on the oscilloscope settings)
- o a Frequency Counter
- o CPS 810 Diagnostic Cartridge
- o Alignment Diskette
- o TV, properly adjusted
- o .050 inch Hex Driver
- o .010 inch feeler gauge

Five procedures make up the Align. 3K Head Position Program. They are:

- o Speed Adjustment
- o Head Azimuth Alignment
- o Head Load Pad Pressure
- o Head/Track Alignment
- o Track 00 Stop Adjustment

Set-up Procedures:

Perform the following set-up procedures before doing any of the tests which make up the Align. 3K Head Position Program.

1. Connect the Disk Drive and TV to the computer.
2. Remove the top cover from the drive to be tested.
3. Power up the oscilloscope and connect the probes to the following points on the Disk Drive rear board (See Figure 3-1).

   *Channel A Probe to C-154
   *Channel B Probe to C-155

4. Plug in the disk drive and turn it on. Turn on the TV.
5. Insert the CPS 810 Diagnostic Cartridge in the computer. Turn the computer on.
6. The menu displays.
7. Insert the alignment diskette.
8. When screen prompts, select the alignment program.

9. Press the **BREAK** key and the program stops, displaying the following prompt table:

Select Track

(Ø=Ø)
(1=1)
(2=16)
(3-32)
(4=33)
(5=34)
(6=34→16)
(M=Return to Menu)

Proceed with each of the alignment procedures and adjustments as shown on the following pages.

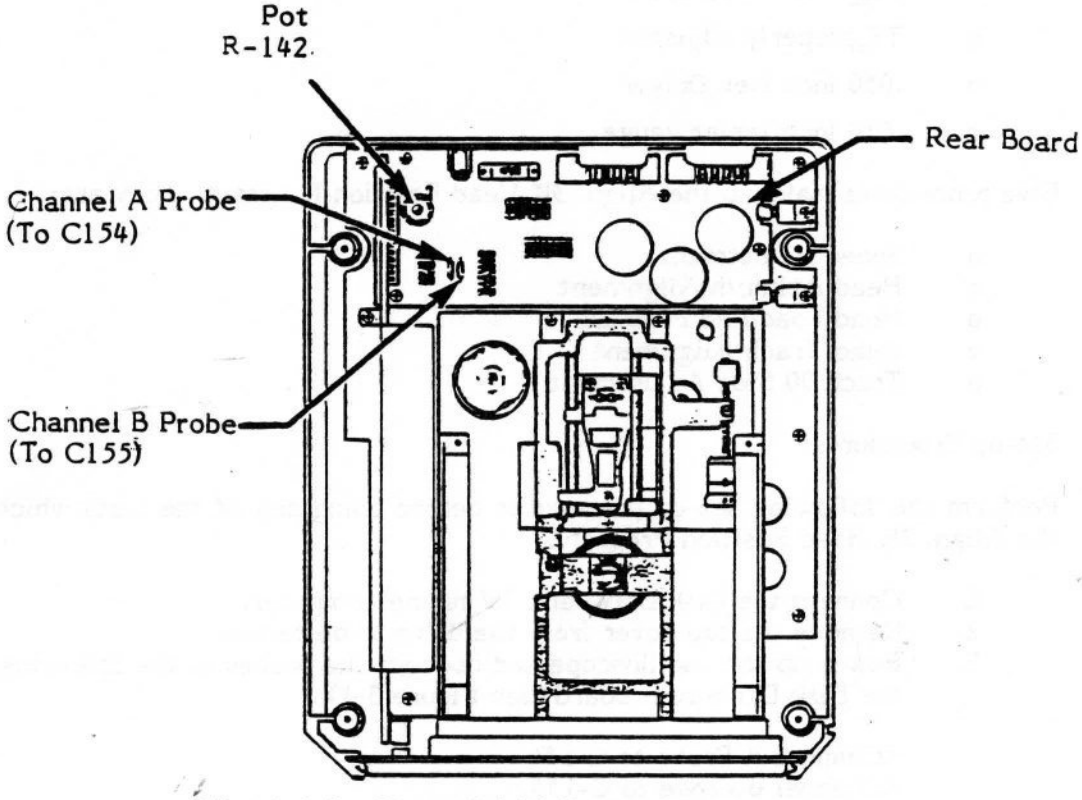

Figure 3-1. Channel A&B Probe Connections

SPEED ADJUSTMENT

Purpose: To check the motor speed and make any required adjustments.

Procedure:

1. Press the **BREAK** key to halt the program to allow a new track to be selected.

   Connect the frequency counter probe to either C-154 or C-155 on the rear board. (Refer to Figure 3-1).

2. Set Frequency Counter Controls to the following settings:

   A. 10k Resolution or 1 Second Sample Time
   B. X1 attenuation or Maximum sensitivity
   C. X1 Probe (preferred)

3. Type the value '0' and press **RETURN.** Head begins reading track 0.

4. When the frequency counter is properly adjusted, a 60.2 KHz reading should be seen on counter. NOTE: **Counter Calibration is critical to this procedure.**

NOTE: If a reading does not appear on the counter, input level is not high enough. Adjust the input level to counter.

5. The reading should be between 60.2 and 60.3 KHz.

6. If the reading is outside these tolerances, adjust the pot R-142.

HEAD AZIMUTH TEST

Purpose: To verify the head azimuth. If the azimuth is not within specification, the Drive Mechanism must be replaced.

Procedure:

1. Press the break key to halt the program and allow a new track to be selected.

   Set the oscilloscope controls to the following settings:

   * Display A+B

   * Channel A: Normal

   * Channel B: Inverted

   * Channel A&B Time .5ms/DIV (Calibrated)

   * Channel A&B Volts .2V/DIV (Calibrated)

2. Type the number 5 and press **RETURN** to position the head over track 34.

3. Make any minor adjustments on the scope to display the azimuth waveform. Compare the waveform on the scope with the waveform shown in Figure 3-2. This shows the acceptable range for the azimuth waveform.

NOTE

Atari recommends replacement of the entire Drive Mechanism if the Azimuth is out of the specified range, due to the complexity of the adjustment. For this reason, be certain that the Azimuth is out of specification before replacement.

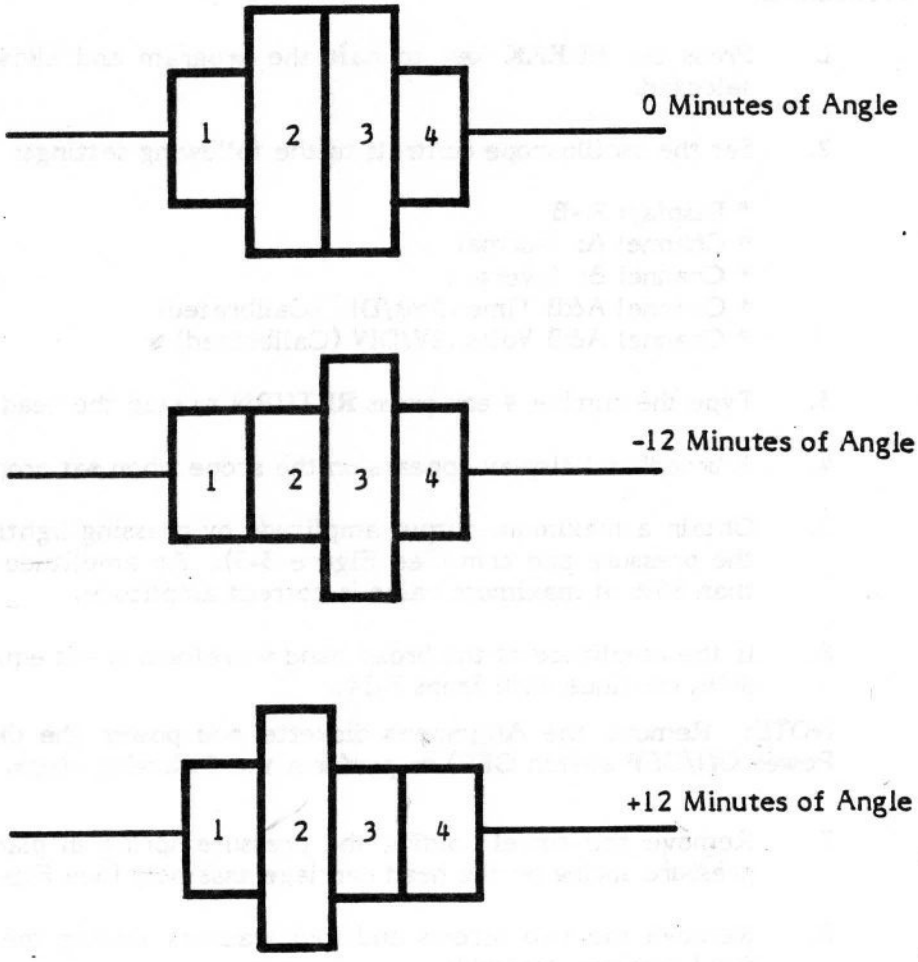

Figure 3-2. Head Azimuth Waveform

HEAD LOAD PAD PRESSURE

CAUTION: Adjustment of pad pressure requires great care and a light touch. Read all instructions thoroughly before attempting any adjustment.

Purpose: To check and adjust the head load pad pressure.

Procedures:

1. Press the **BREAK** key to halt the program and allow a new track to be selected.

2. Set the oscilloscope controls to the following settings:

   * Display: A+B
   * Channel A: Normal
   * Channel B: Inverted
   * Channel A&B Time .5ms/DIV (Calibrated)
   * Channel A&B Volts .2V/DIV (Calibrated)

3. Type the number **4** and press **RETURN** to step the head to track 33.

4. A broadband display appears on the scope when set properly.

5. Obtain a maximum output amplitude by pressing lightly with one finger on the pressure pad arm (See Figure 3-3). An amplitude equal to or greater than 80% of maximum value is correct amplitude.

6. If the amplitude of the broad band waveform is not equal to or greater than 80%, continue with Steps 7-14.

NOTE: Remove the Alignment diskette and power the disk drive down (turn Power ON/OFF switch OFF) to perform the following steps.

7. Remove the dowel holding the pressure spring in place, then remove the pressure spring on the head carriage assembly (See Figure 3-3).

8. Remove the two screws and four washers holding the pressure pad to the head carriage assembly.

9. Lift the pressure pad arm away from the head carriage assembly.

10. Locate the spring steel tabs on the rear of the pressure pad arm. Bend both tabs slightly downward approximately 1/16 of an inch.

11. Install the pressure pad arm on the head carriage assembly.

12. Replace the two screws and four washers holding the pressure pad arm to the head carriage assembly. Be sure the pressure pad is positioned over the center of the head.

13. Install the pressure spring on the head carriage assembly.

14. Power up the drive and insert the Alignment diskette. Retest by returning to Step 1 of this procedure. Repeat these procedures until the correct amplitude is achieved.

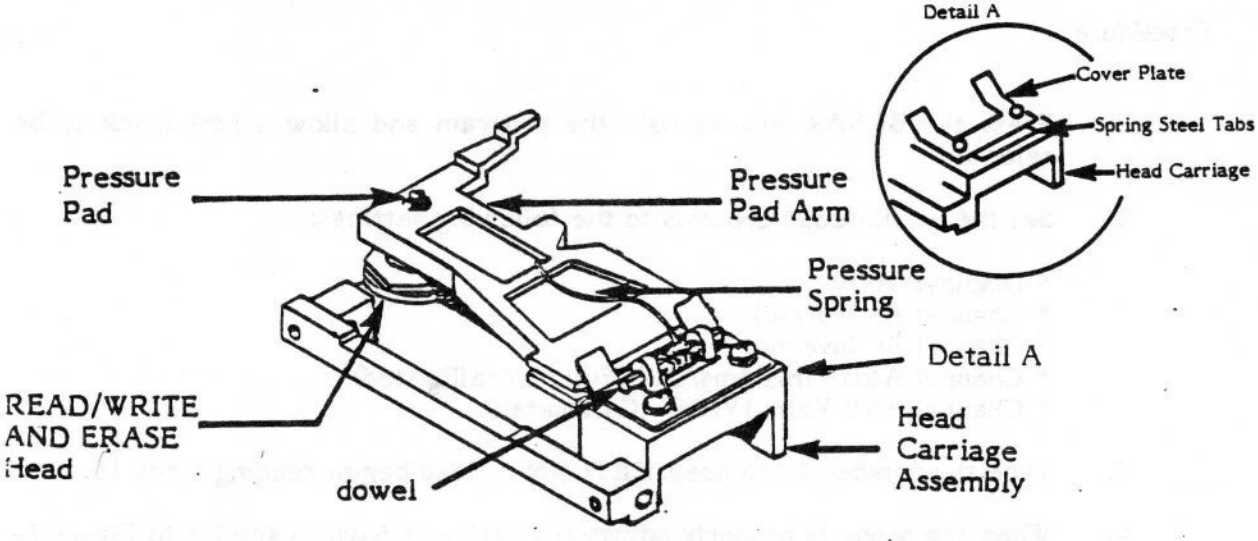

Figure 3-3. Head Assembly-Component Identification

HEAD/TRACK ALIGNMENT

Purpose: To check the head and track alignment and make any required adjustments.

Procedure:

1. Press the **BREAK** key to halt the program and allow a new track to be selected.

2. Set the oscilloscope controls to the following settings:

   * Display: A+B
   * Channel A: Normal
   * Channel B: Inverted
   * Channel A&B Time 5ms/DIV (Fully Uncalibrated)
   * Channel A&B Volt .1V/DIV (Calibrated)

3. Type the number 2 and press **RETURN** . Head begins reading track 16.

4. When the scope is properly adjusted a cat's-eye pattern similar to Figure 3-4 appears on the scope.

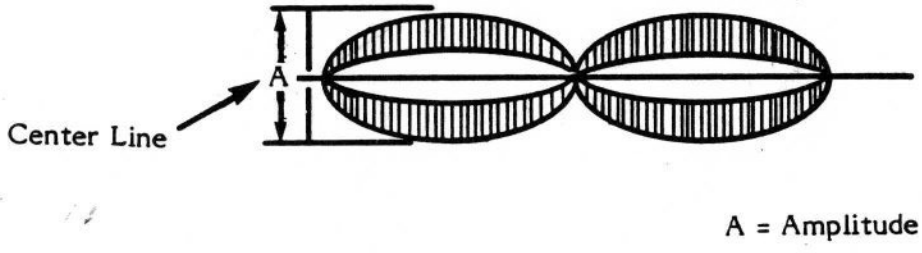

Figure 3-4. Cat's-Eye Pattern

5. Compare the amplitude of the cat's-eye. If each cat's-eye lobe pattern is equal in amplitude or within 80% of each other, no adjustment is required. (Refer to Figure 3-5.) NOTE: The cat's eye pattern may be less stable than on a wide band oscilloscope.

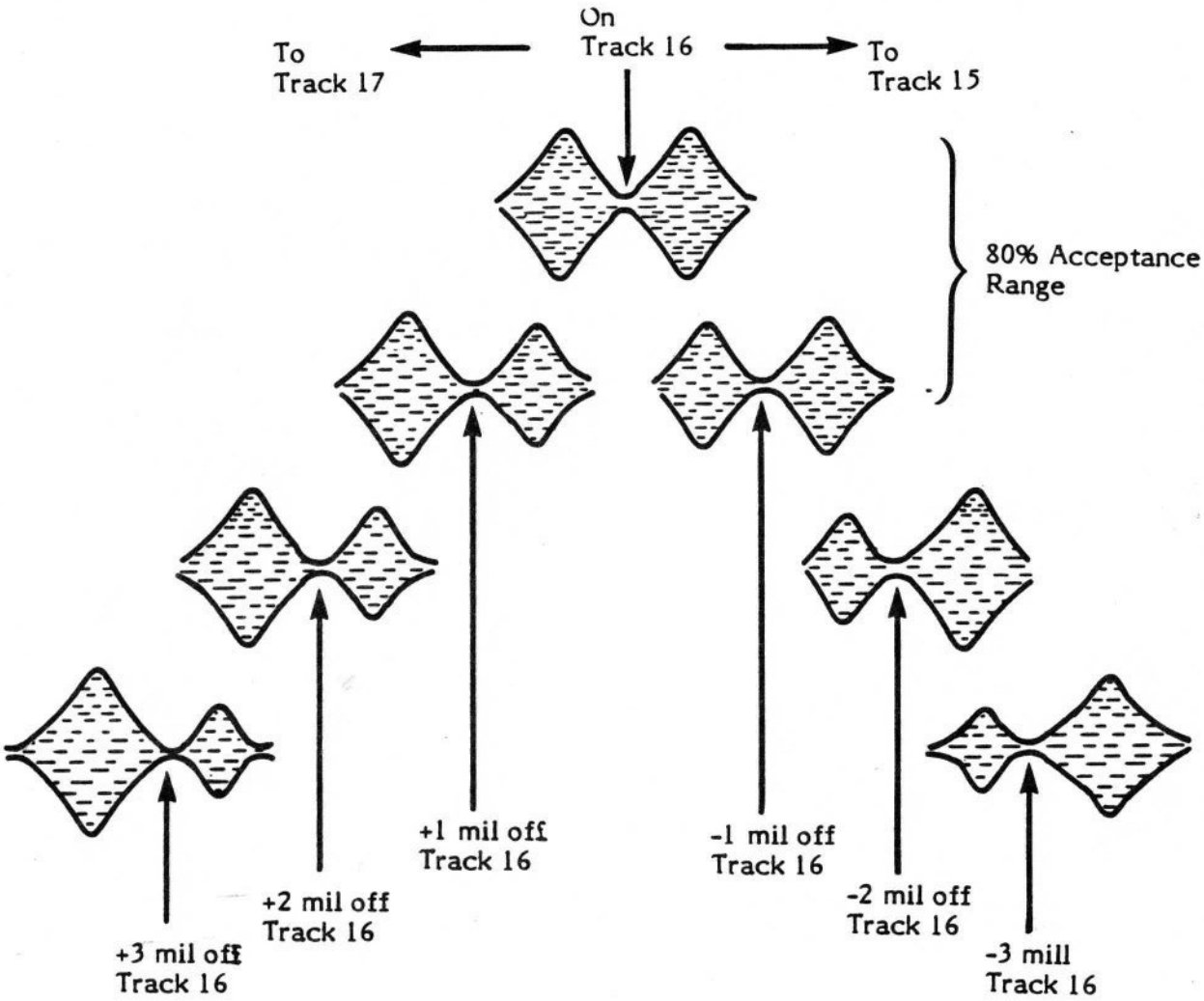

Figure 3-5. Amplitude Variation of Cat's-Eye

6. If the cat's-eyes are not within tolerance, continue with the following steps. **Follow the instructions with care and use a <u>very</u> light touch. This is a very delicate operation.**

7. Loosen the Allen head setscrew holding the band pulley to the stepper motor shaft (See Figure 3-6). Note: To do this, **let drive cycle,** then loosen the allenhead setscrew.

8. Gripping the head assembly carefully, move the band pulley very slightly in either direction. Figure 3-5 illustrates the cat's-eye-lobe pattern when off track. Use this as a guide when moving the band pulley to balance cat's eyes.

   NOTE: The track to track spacing is only 0.02083 inches. Move the band pulley a very small amount each time.

9. When cat's eyes are balanced, wait one cycle then tighten the setscrew on the band pulley to 2 inch-lbs of torque. The setscrew is brass and tightens with little pressure.

10. Type the number 6 and press RETURN to retest cat's-eyes alignment.

11. Repeat steps 3 through 10 until each cat's-eye-lobe pattern is equal in amplitude or within 80% of each other.

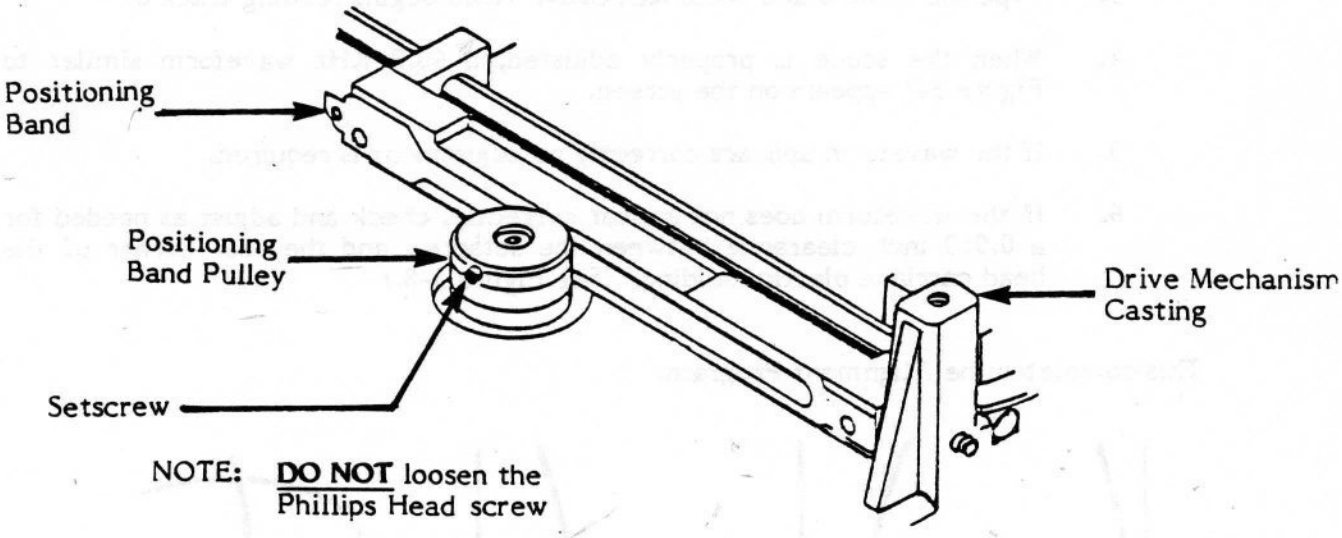

Figure 3-6. Setscrew Location

TRACK 00 STOP ADJUSTMENT

Purpose: To check the setscrew rear stop and make any required adjustments. Skip this procedure if the Speed Adjustment is correct.

Procedure:

1. Press the **BREAK** key to halt the Align. 3K program and allow a new track to be selected.

2. Set the oscilloscope controls to the following settings:

   * Display: A+B
   * Channel A: Normal
   * Channel B: Inverted
   * Channel A&B Time 2us/DIV (Calibrated)
   * Channel A & B Volt 50 mV/DIV (Calibrated)

3. Type the value **0** and press **RETURN.** Head begins reading track 0.

4. When the scope is properly adjusted, a 60.2 KHz waveform similar to Figure 3-7 appears on the screen.

5. If the waveform appears correctly no adjustment is required.

6. If the waveform does not appear correctly, check and adjust as needed for a 0.010 inch clearance between the setscrew and the rear corner of the head carriage plastic molding. (See Figure 3-8.)

This completes the Alignment Program.

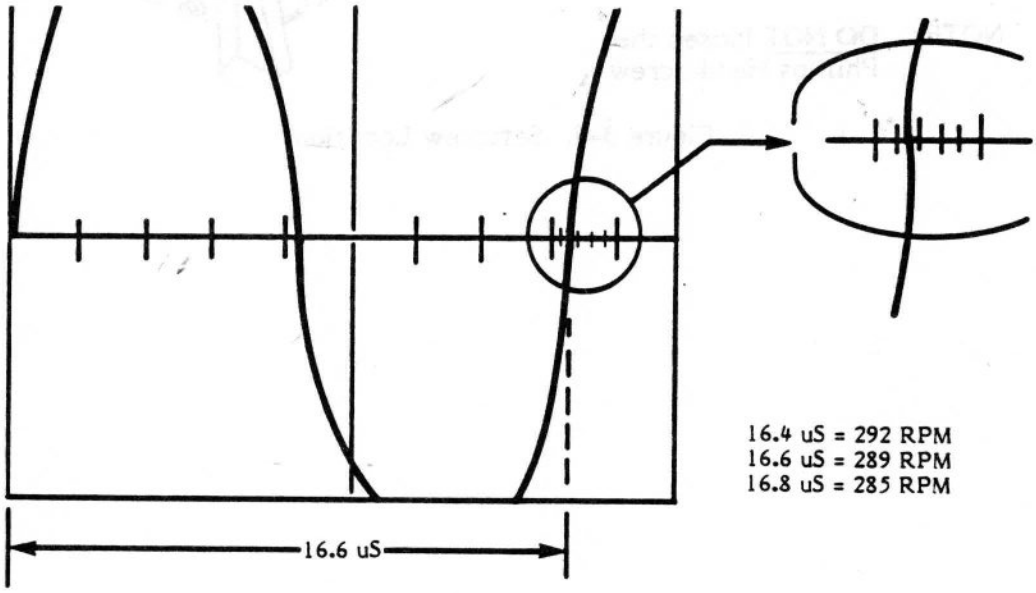

Figure 3-7. Speed Adjustment Waveform

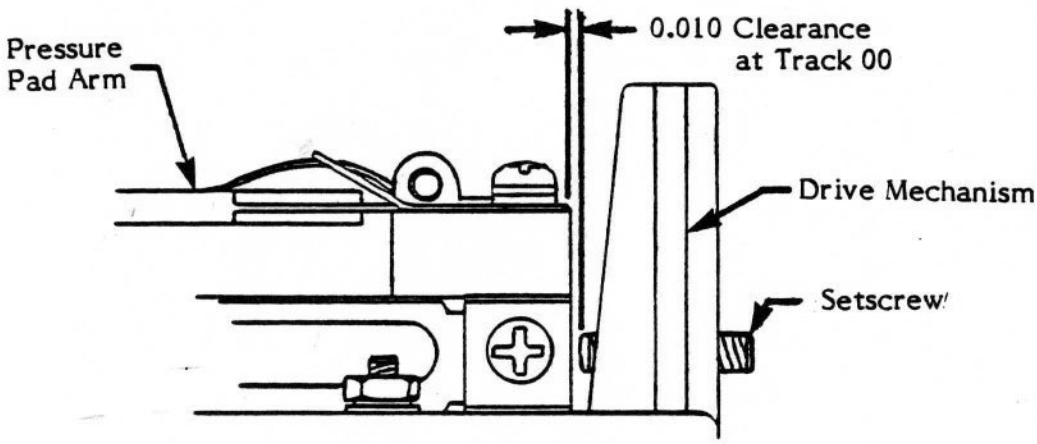

Figure 3-8. Head to Setscrew Clearance

SECTION 4

DIAGNOSTIC FLOWCHARTS

The Diagnostic Flowchart is intended to be easy to use and the primary aid when troubleshooting the 810 Disk Drive. Follow the prompts in the order presented. When a question is asked, follow the line from the box that best applies to your unit's condition. When that line terminates with a letter inside a circle, locate the letter on a different page and continue the diagnosis. The flowchart leaves nothing to chance, it tells you when to perform a specific test and when to replace components. Section 3, Test Equipment/Diagnostic Tests contains detailed instructions for each of the tests referenced in this section.

SWAP OUT PROCEDURE

At many places in the diagnostic flowchart, a box tells you to "swap out" a component, a chip, or a number of chips in a particular order. The "swap-out" instruction means that you should replace the indicated components (one at a time) with a known-good component of the same type. The 810 unit should then be tested with the new, known-good component in place to see whether the swap out solved the problem being checked. If the swap out did not fix the problem, the known good component should be removed, and the original component reinserted. In this way, you avoid needlessly replacing good components.

REPLACE IN ORDER

The "replace in order" instruction means that you should replace the components indicated in the order listed until the result called out in the previous block is obtained.

N - Some lines terminate with an N inside a circle. When this occurs, call your Atari Repair Hotline.

Inside California
(800) 672-1466

Outside California
(800) 538-1535
(800) 538-1536

This Page Intentionally Left Blank

Initial Power-Up Sequence

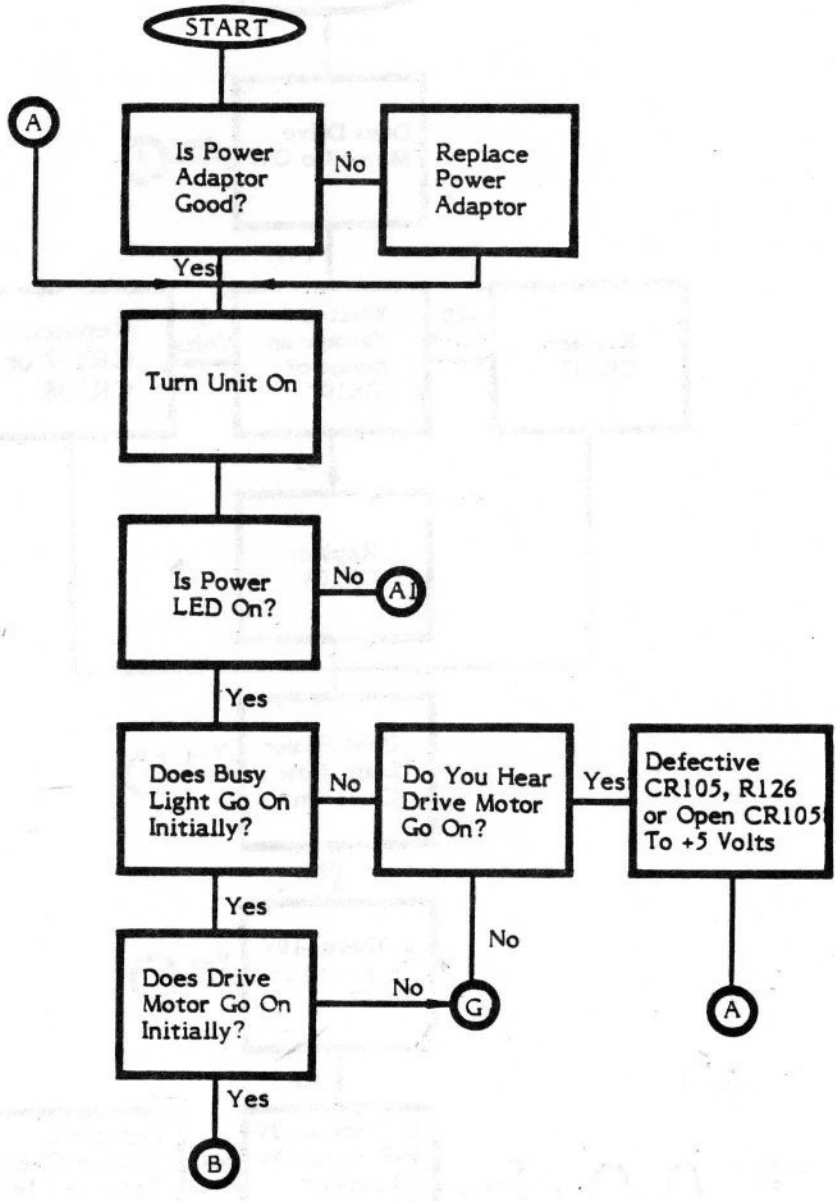

Initial Power-Up Sequence (cont)

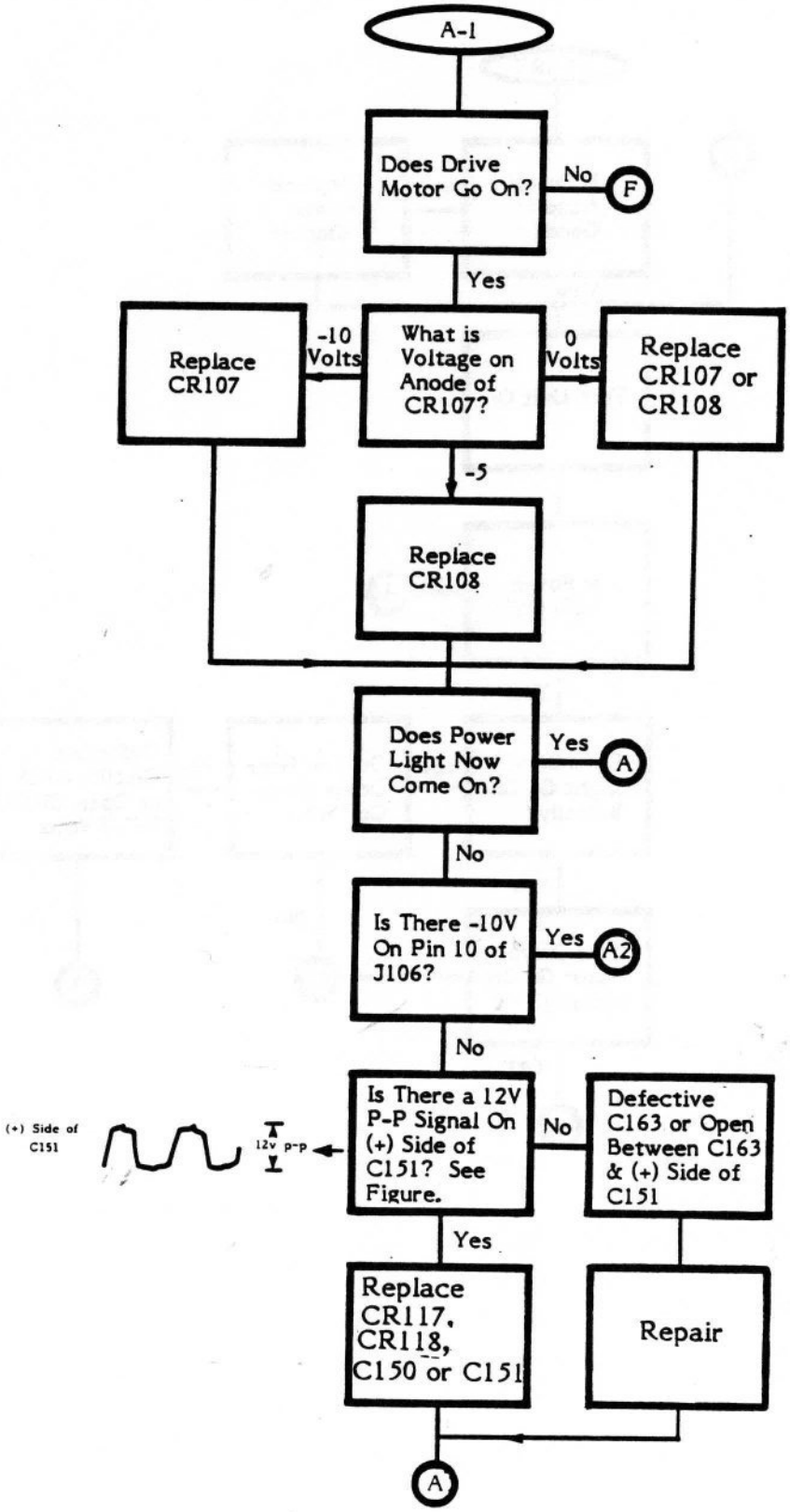

Initial Power-Up Sequence (cont)

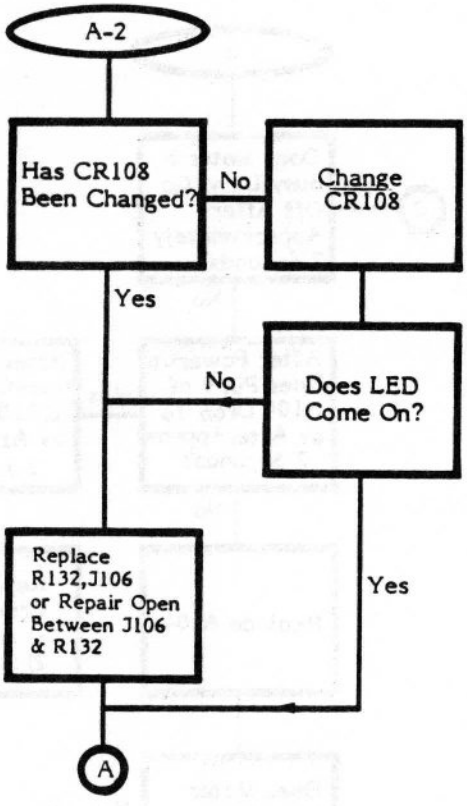

Initial Power-Up Sequence (cont)

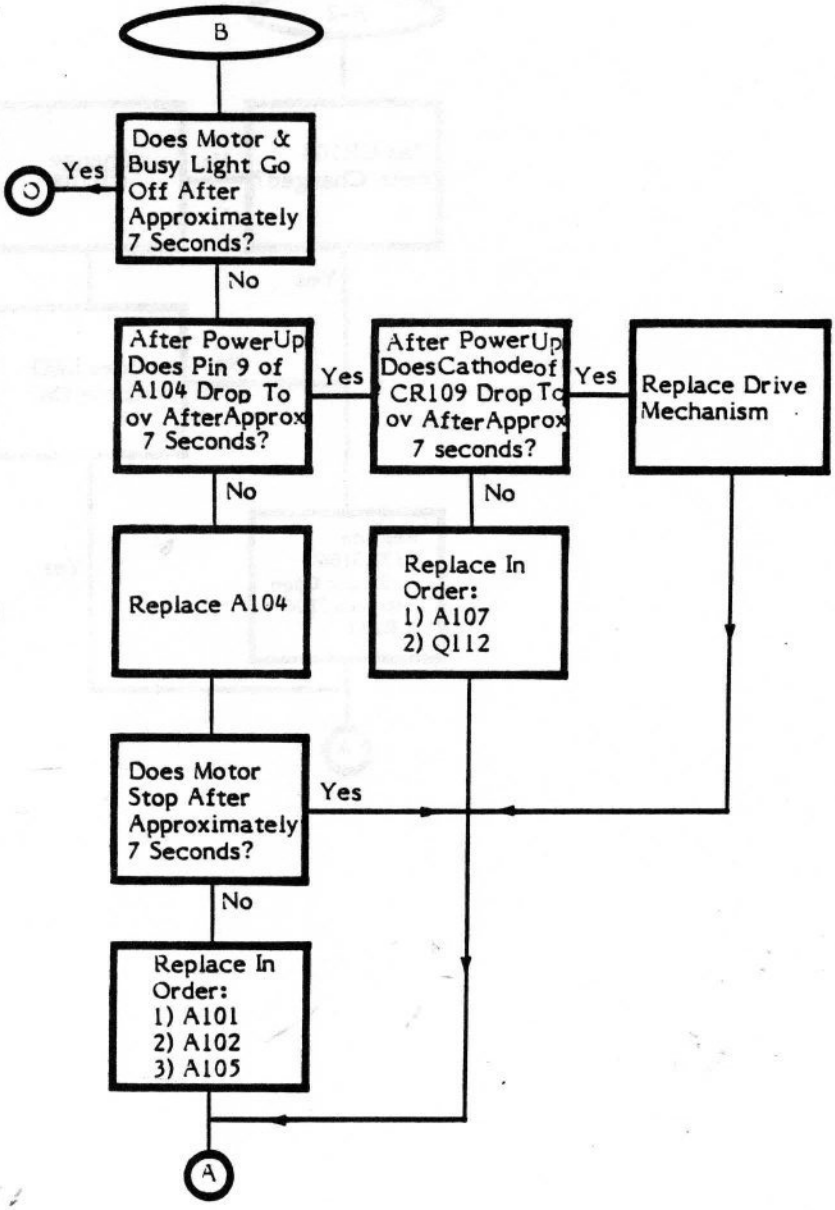

Burn-In Test

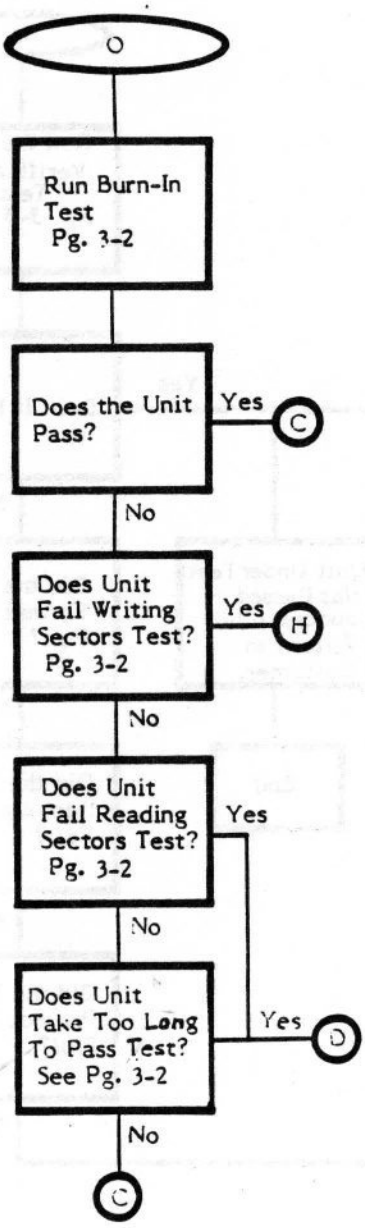
O
Run Burn-In Test Pg. 3-2
Does the Unit Pass?
Yes
C
No
Does Unit Fail Writing Sectors Test? Pg. 3-2
Yes
H
No
Does Unit Fail Reading Sectors Test? Pg. 3-2
Yes
No
Does Unit Take Too Long To Pass Test? See Pg. 3-2
Yes
D
No
C

DOS Verification Test

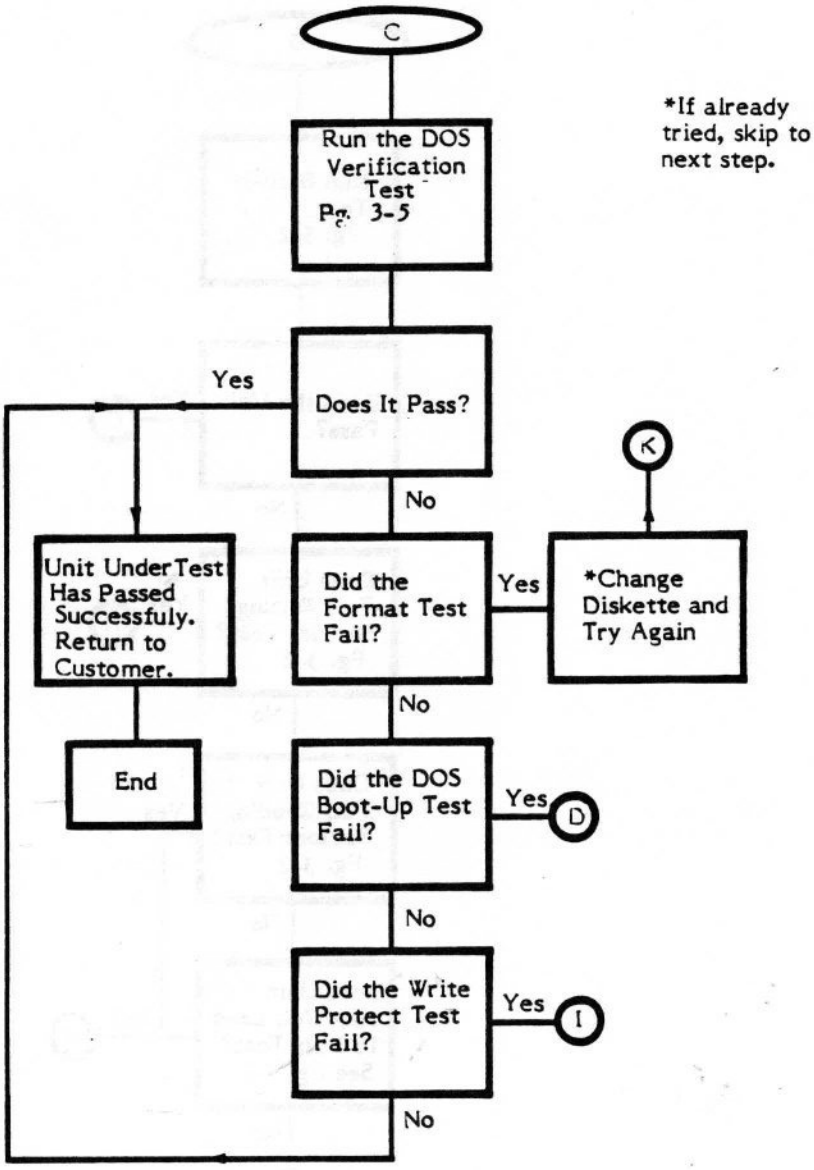

Alignment Program

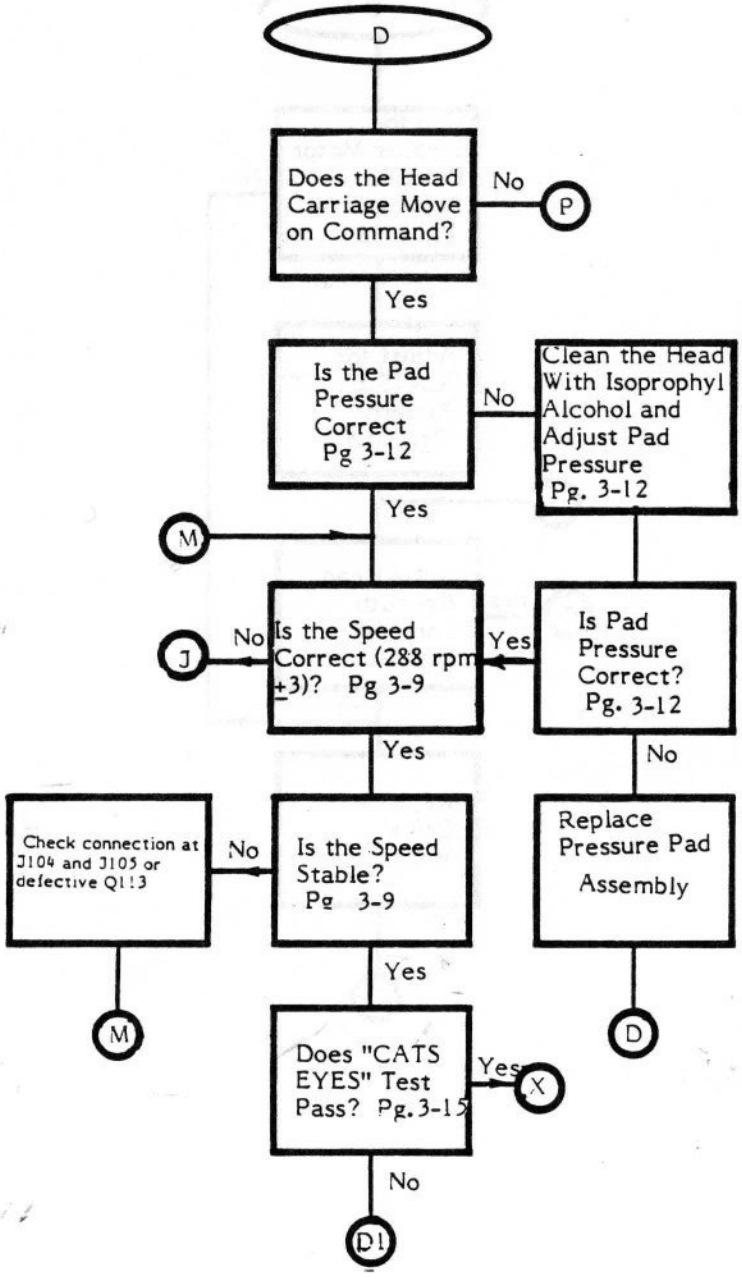

Alignment Program (cont)

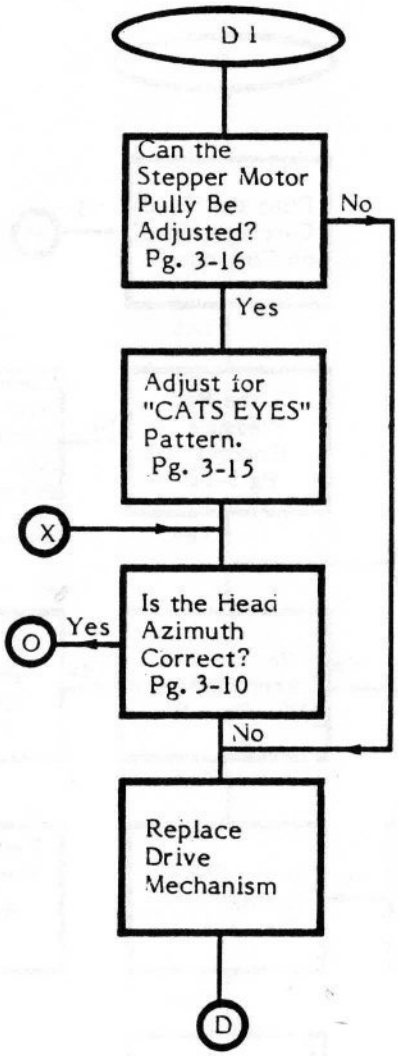

No Power Troubleshooting

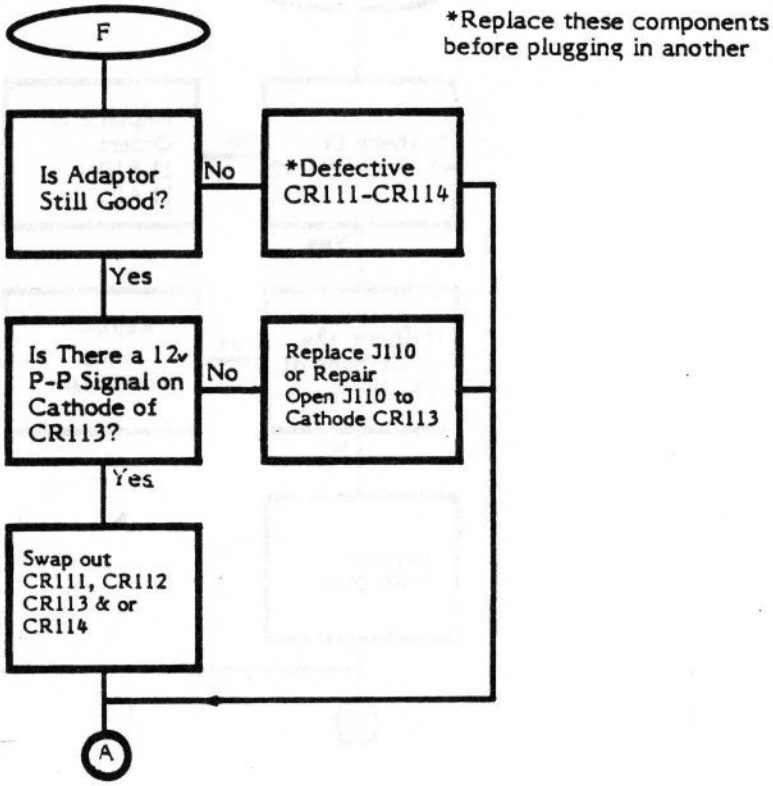

Drive Motor Troubleshooting

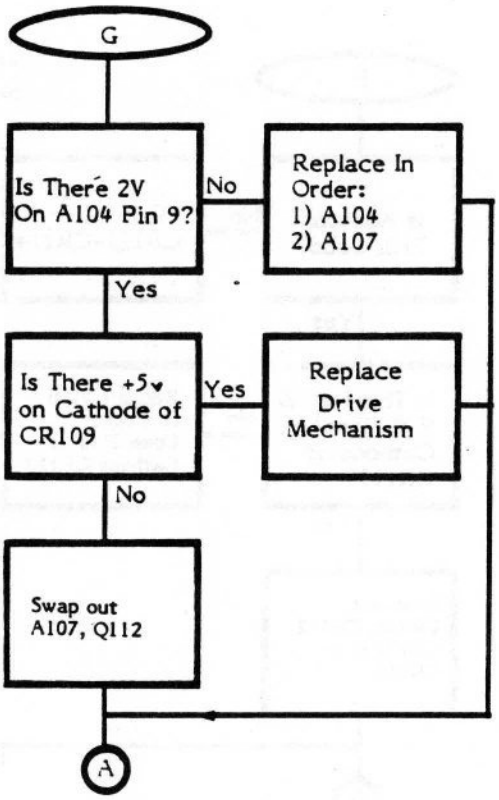

Write Logic Troubleshooting

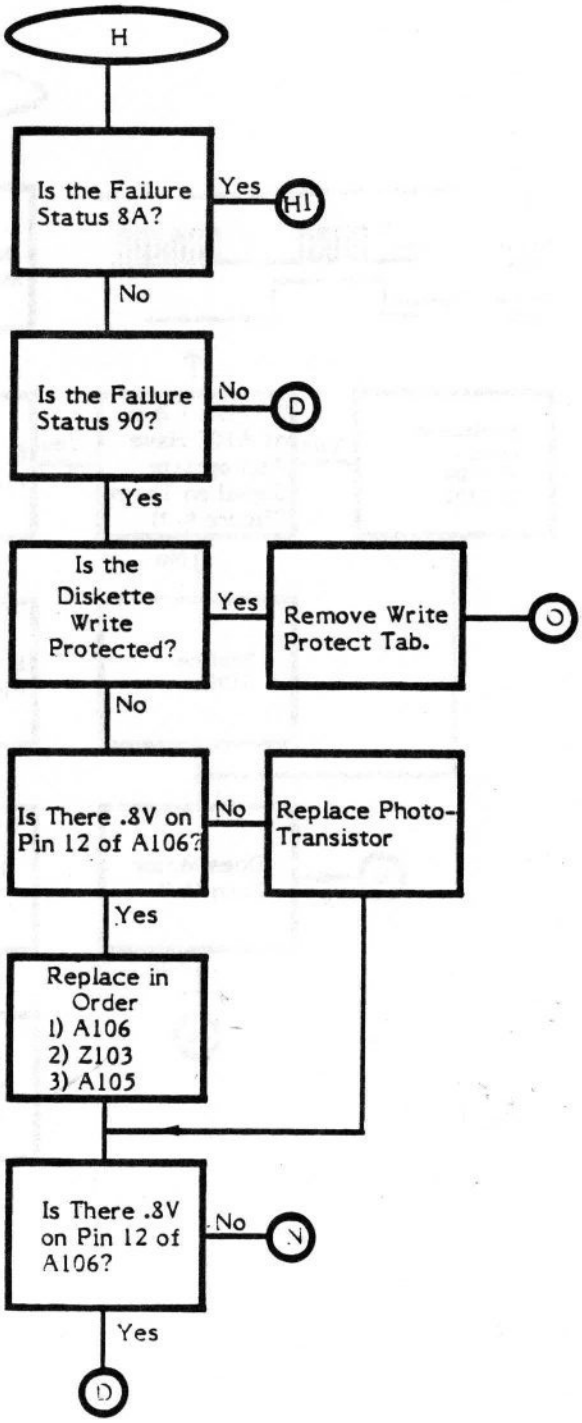

Write Logic Troubleshooting - Part II

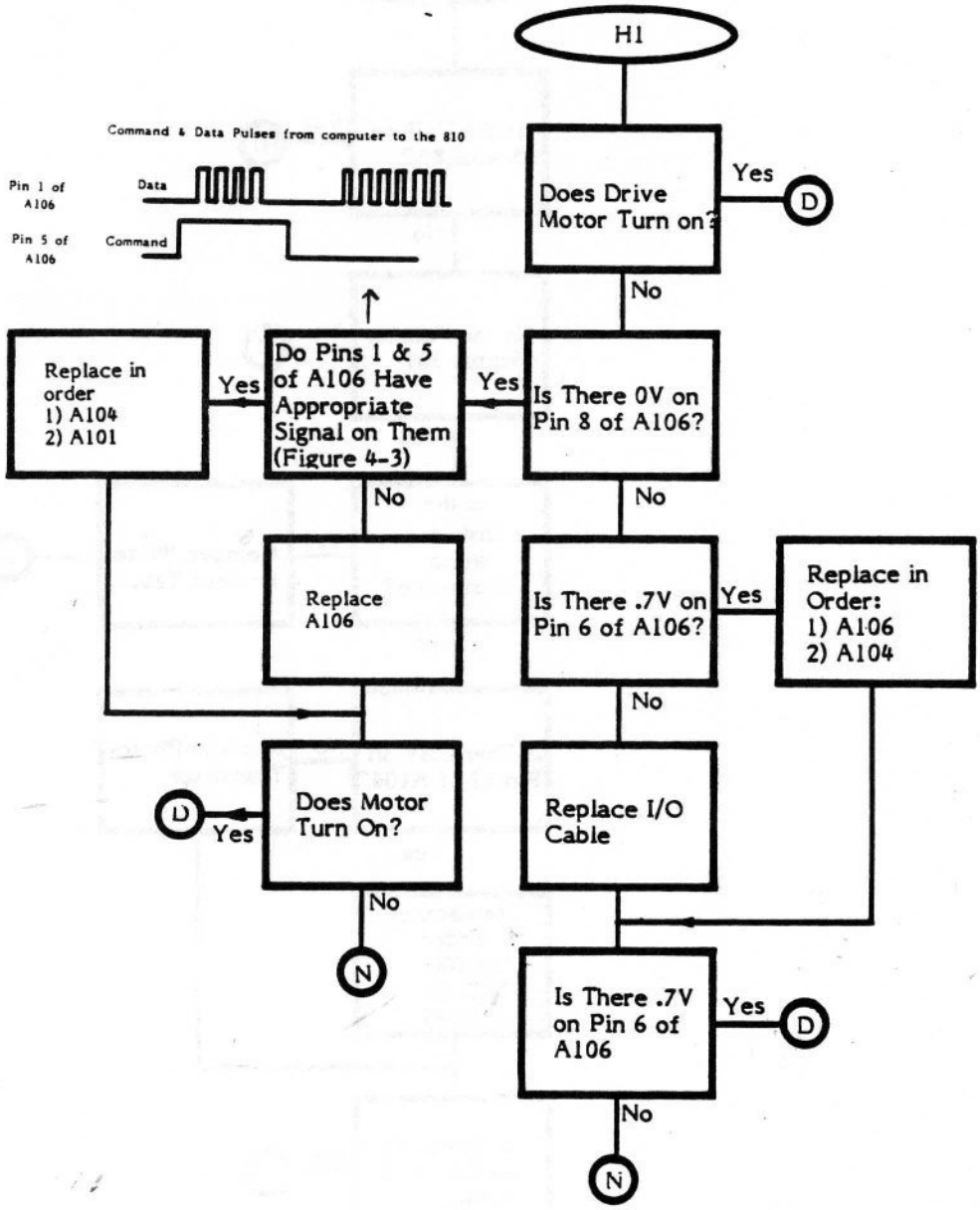

Write Protect Troubleshooting

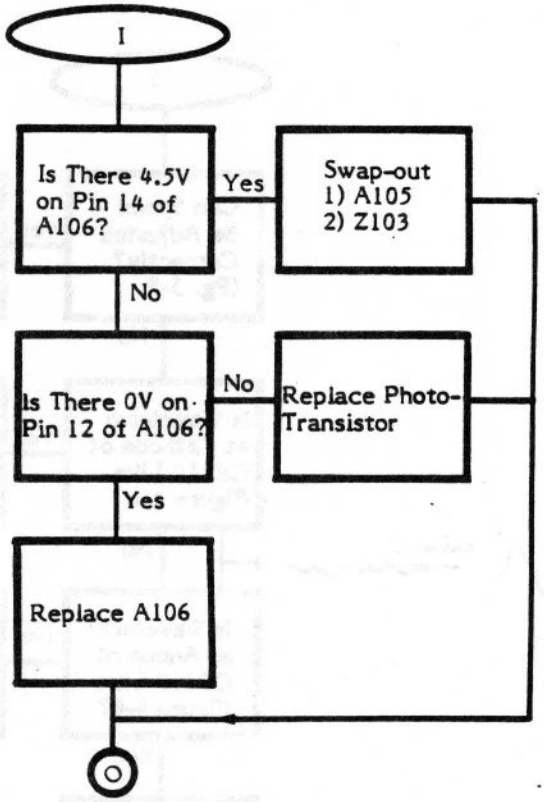

Speed Troubleshooting

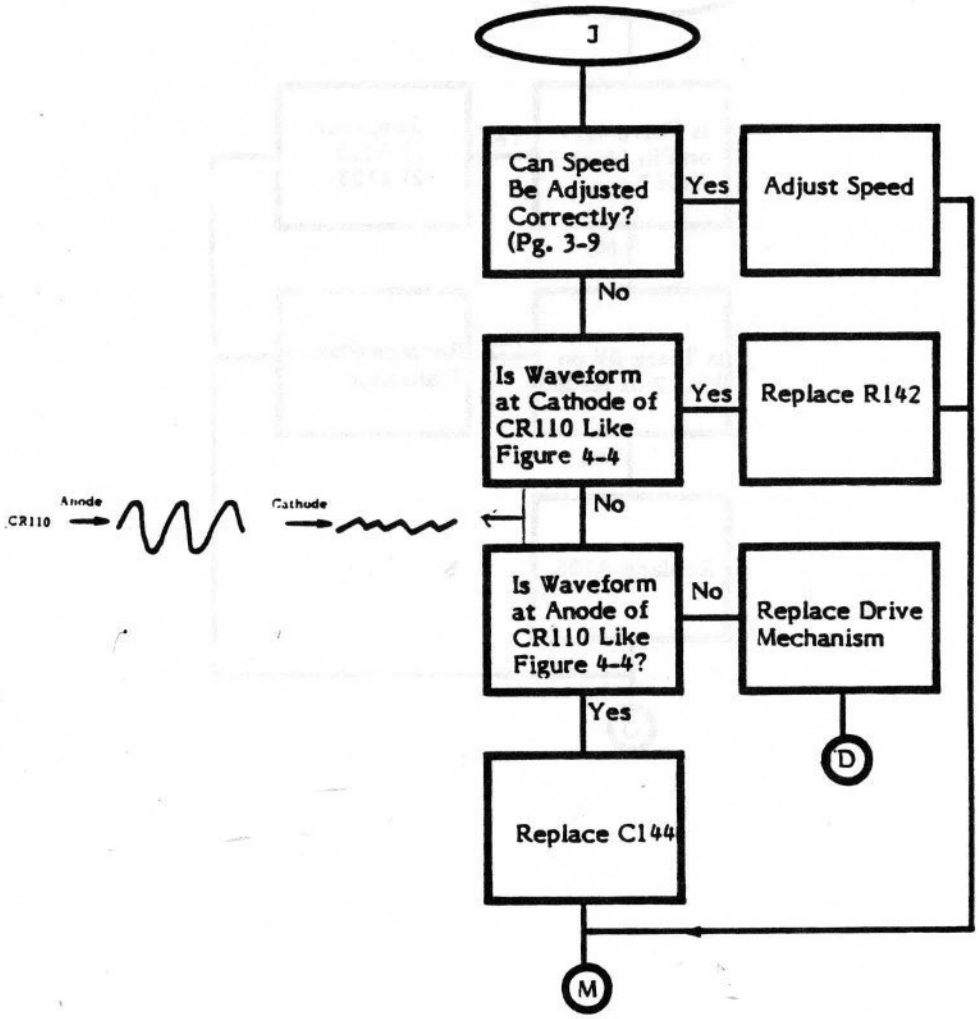

Fail Format Troubleshooting

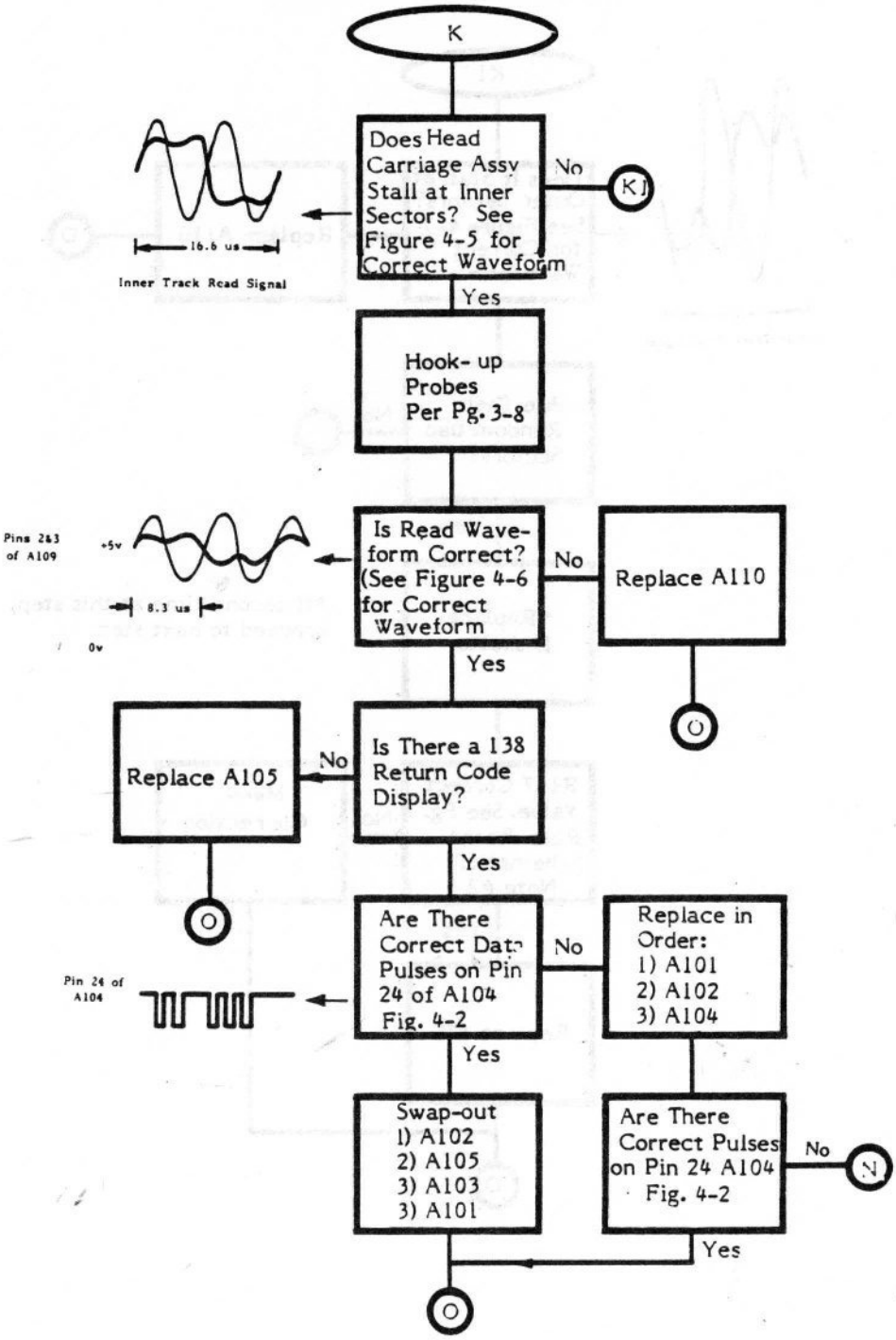

Fail Format Troubleshooting (cont)

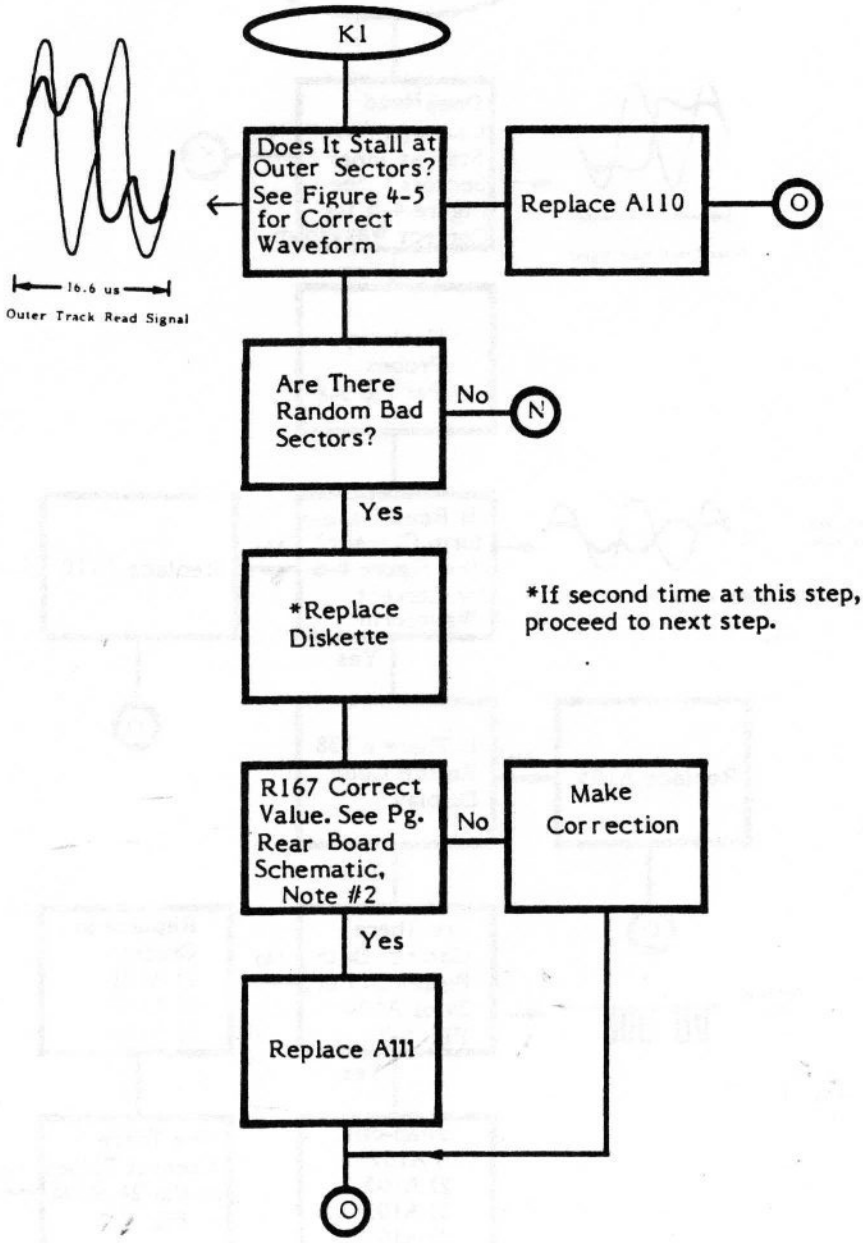

Stepper Motor Troubleshooting

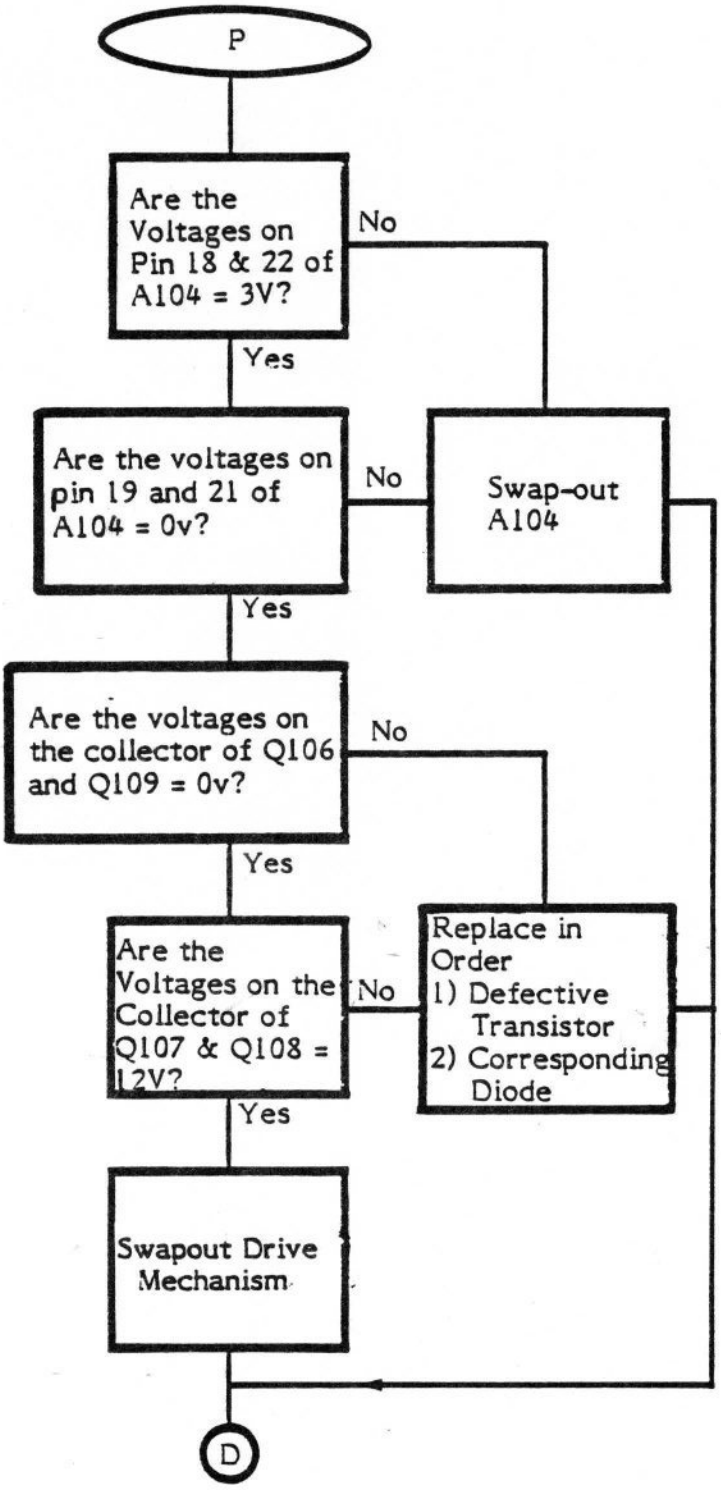

SECTION 5

Symptom Checklist

The Symptom Checklist is designed to assist the experienced technician arrive at a rapid diagnosis for 810 Disk Drive problems. The checklist is not intended to replace the Diagnostic Flowchart as the primary troubleshooting guide, but rather, to supplement the flowchart. To save you time, Diagnostic Flowchart entry points are indicated on the checklist where applicable.

NOTE: Not all failures show Diagnostic Flowchart Entry Points.

Symptoms have been divided as follows:

Side Board Failures

- Stepper Motor Circuit
- Power-up Logic and Data Interface Circuits
- Write Circuit
- Write Protect Circuit
- Read Circuit
- Central Processing System

Rear Board Failures

- Drive Motor and Tach Feedback Circuit
- Power Supply Circuits
- Write Circuit
- Read Circuit

Drive Mechanism Failures

NOTE: Each circuit is referenced to coordinates on the appropriate schematic in Section 2, Silkscreens and Schematics.

Each symptom is accompanied by possible causes and the corrective action required.

SIDE BOARD FAILURES

Symptom	Possible Cause	Corrective Action	Diagnostic Flowchart Entry Point
	Stepper Motor Circuit (coordinates B,8)		
Will Not Step	J102 Connector	Be Sure All Connections Are Tight.	P (Pg.4-19)
	PIA (A104)	Replace	P (Pg.4-19)
	Incorrect Voltage Levels	Normal Troubleshooting Techniques	P (Pg.4-19)
Skips Tracks	Driver Transistors Q106-Q109	Replace Defective Transistor	P (Pg.4-19)
	PIA (A104)	Replace	P (Pg.4-19)
	Power-Up Logic and Data Interface Circuits (coordinates B&C,6)		
No Power LED	LED (CR108)	Replace	A (Pg. 4-3)
	No -5 Volts	Replace Zener Diode (CR107)	A (Pg. 4-3)
Does Not Respond To Commands From The Computer	Transistor Array (A106)	Replace	
	PIA (A104)	Replace	
Motor Does Not Stop After Timeout	PIA (A104)	Replace	B (Pg. 4-6)
	Shield Shorting To +5 Volt Trace	Clip Shield So It Does Not Touch The +5V Trace	B (Pg. 4-6)
	Transistors Q110 or Q111	Replace	B (Pg. 4-6)

SIDE BOARD FAILURES (CONT)

Symptom	Possible Cause	Corrective Action	Diagnostic Flowchart Entry Point
	Write Circuit (coordinates C, 4&3)		
Write Errors or Will Not Format on First Pass	1771 FDC (A105)	Replace	K (Pg.4-17)
	Write/Erase or Data Gate (Z105)	Check For 1MHz Clock Signal at Pin 3 or Replace	K (Pg.4-17)
	Incorrect Voltage Levels on IC's	Normal Trouble-shooting Techniques	K (Pg.4-17)
	Write Protect Circuit (coordinates D,3&4)		
Error 144 During Write or Format Operation	J101 Connector	Be Sure All Connections Are Tight	I (Pg.4-15)
	Transistor Array (A106)	Replace	I (Pg.4-15)
	Inverter (Z103)	Replace	I (Pg.4-15)
	1771 FDC (A105)	Replace	I (Pg.4-15)
	No +5 Volts	Normal Trouble shooting Techniques	I (Pg.4-15)
	Read Circuit (coordinates C,1-3)		
	Use the following Test Points for Waveform Comparison		
	See Figure 5-2 for Correct Waveforms		
	Z104 Pin 1 Z104 Pin 3	Z104 Pin 4	
	Z104 Pin 13	Z104 Pin 11	
Failure to Read Any Diskette or Garbled Data Received From a Known Good Diskette	Pulse Generator	Replace Z104 or Q102	
	Time Domain Filter	Replace Z104, Z101 Z103, Q103 or Q104	
	Symmetry Amp (Z104C)	Replace Z104	
	1771 FDC	Replace	

SIDE BOARD FAILURES (CONT)

Central Processing System (coordinates C&D,4-8)

If the other circuits have been checked and found good, one of the IC's in this circuit is assumed to be defective.

FAILURES	POSSIBLE CAUSE
	Replace in order:
Power-Up Failures	1. PIA (A104)
Boot Errors	2. 1771 FDC (A105)
Stepper Motor Failures	3. Microprocessor 6507 (A101)
Drive Motor Failures	4. Custom ROM (A102)
I/O Failures	5. RAM 6810 (A103)
Drive Code Switch Not Recognized	6. NAND Gate CD4011 (Z102)
	7. Exclusive NOR Gate (Z104)
	8. Inverter (Z103)
	9. Check 1MHz Clock (X101)

REAR BOARD FAILURES

Symptom	Possible Cause	Corrective Action	Diagnostic Flowchart Entry Point
	Drive Motor and Tach Feedback Circuit (coordinates C&D,7-8)		
Drive Motor Not Operating	Incorrect Voltage Levels	Normal Trouble shooting Techniques	G (Pg.4-12)
	Motor Control Line Not Going High	Check for Bad Connections at Pin 9 of J106 Connector	G (Pg.4-12)
	Transistor Array (A107)	Replace	G (Pg.4-12)
	Transistor (Q112)	Replace	G (Pg.4-12)
	Connector J103	Make Sure All Connections Are Tight	G (Pg.4-12)
Drive Motor Operates Sporadically	Transistor Array (A107)	Replace	G (Pg.4-12)
	Transistor (Q112)	Replace	G (Pg.4-12)
	Speed Control Pot (R142)	Make Sure There Is No Glyptol On This Pot. If There Is, Replace Pot	G (Pg.4-12)
	Connector J103	Make Sure All Connections Are Tight	G (Pg.4-12)
Drive Motor Speed Varies	Speed Control Pot (R142)	Make Sure There Is No Glyptol On This Pot. If There Is, Replace Pot	M (Pg.4-9)
	Transistor Array (A107)	Replace	M (Pg.4-9)
	Transistor (Q112)	Replace	M (Pg.4-9)
	Incorrect Voltage Levels	Normal Trouble shooting Techniques	M (Pg.4-9)

REAR BOARD FAILURES (CONT)

Symptom	Possible Cause	Corrective Action	Diagnostic Flowchart Entry Point
	Power Supply Circuits (coordinates B&C,5-6)		
No Power or Blows Power Adaptor	Bridge Rectifier Diodes	Replace All The Diodes In The Bridge (CR111-114)	F (Pg.4-11)
	Power Adaptor	Replace	F (Pg.4-11)
No +5 Volts	Regulator 7805 (A108)	Replace	F (Pg.4-11)
No +12 Volts	Pass Transistor (Q113)	Replace	F (Pg.4-11)
	Regulator Circuit	Replace Q114 or Q115	F (Pg.4-11)
	12 Volt Doubler	Replace CR115,CR116 or C149	F (Pg.4-11)
No -5 Volts	-5 Volt Doubler	Replace CR117,CR118 or C151	F (Pg.4-11)
Drive Motor Speed Varies	3 Pin Molex Connectors J104 & J105	Make Sure Good Contact Is Being Made.	F (Pg.4-11)
	Write Circuit (coordinates B,3)		
	Use the following Test Points for Waveform Comparison		
	See Figure 5-3 for Correct Waveforms		
	A111 Pin 6 A111 Pin 12 Q117 Base	A111 Pin 9 Q116 Base	
Fails to Write Any Sectors	Write Driver (A111)	Replace	K (Pg.4-17)
	Write Current Wrong	Check the Value of R167	K (Pg.4-17)
	Write & Data Gate Connections	Make Sure Pins 16-19 of J106 Are Making A Tight Connection	K (Pg.4-17)
	Incorrect Voltage Levels	Normal Trouble-shooting Techniques	K (Pg.4-17)

REAR BOARD FAILURES (CONT)

Symptom	Possible Cause	Corrective Action	Diagnostic Flowchart Entry Point
	Write Circuit (cont)		
Fails to Write to Inner Tracks (sectors 650-720)	Write Current Too High	Check the Value of R167	K (Pg.4-17)
	Write Drivers (A111)	Replace	K (Pg.4-17)
	Incorrect Voltage Levels	Normal Trouble-shooting Techniques	K (Pg.4-17)
Fails to Write to Outer Tracks (Sectors 0-80)	Write Current Too Low	Check the value of R167	K (Pg.4-17)
	Write Drivers (A111)	Replace	K (Pg.4-17)
	Incorrect Voltage Levels	Normal Trouble-shooting Techniques	K (Pg.4-17)
Writes Garbled Data	Erase Drivers Q116-117	Replace Q116 or Q117	K (Pg.4-17)
	Incorrect Voltage	Normal Troubleshooting	K (Pg.4-17)

Read Circuit (coordinates C,1-3)

Use the following Test Points for Waveform Comparison

See Figure 5-4 for Correct Waveforms

A109 Pin 7
A109 Pin 3
A109 Pin 2

Fails to Read Inner Tracks (Sectors 650-720)	Differential Amp (A110)	Replace With A Higher Gain Transistor Array (C016821)	K (Pg.4-17)
Fails to Read Outer Tracks (Sectors 0-80)	Differential Amp (A110)	Replace with A Lower Gain Transistor Array (C010174)	K (Pg.4-17)

Symptom	Possible Cause	Corrective Action	Diagnostic Flowchart Entry Point
Fails to Read Anything	Incorrect Voltage Levels	Normal Trouble-shooting Techniques	K (Pg.4-17)
	A110	Replace	K (Pg.4-17)
	Zero Crossing Detector (A109)	Replace	K (Pg.4-17)
	Read Circuit Modifications Not Made (refer to Service Bulletins, Section 9)	Double Check Modifications for Correctness	K (Pg.4-17)

DRIVE MECHANISM FAILURES

Symptom	Possible Cause	Corrective Action	Diagnostic Flowchart Entry Point
Speed Varies	Drive Belt Tension	Replace Belt	D (Pg.4-9)
	Drive Motor Tach	Replace Drive Mechanism	D (Pg.4-9)
	Drive Motor Bearings	Replace Drive Mechanism	D (Pg.4-9)
Will Not Step Correctly	Stepper Motor	Replace Drive Mechanism	D (Pg.4-9)
	Stepper Motor Band	Replace or Adjust Band Pulley (Pg. 6-11)	D (Pg.4-9)
	Head Carriage Assembly Hanging Up	Replace Drive Mechanism	D (Pg.4-9)
	Zero Track Adjustment	Perform Alignment Procedure	D (Pg.4-9)
Intermittent Read or Write Errors	Pressure Pad	Replace Pressure Pad Assembly (Pg. 3-12)	D (Pg.4-9)
	Burned Head	Replace Drive Mechanism	D (Pg.4-9)
	Dirty Read/Write Head	Clean With 91% Iso-propyl Alcohol	D (Pg.4-9)
Diskette Incompatibility	Radial Track Alignment Off	Perform Alignment Procedure	D (Pg.4-9)
	Head Azimuth Alignment	Replace Drive Mechanism	D (Pg.4-9)
Write Protect Not Working	Write Protect Photo Transistor	Replace Right Hand Guide/Write Protect Assembly (Pg. 6-13)	D (Pg.4-9)
Diskette Not Ejecting	Eject Spring Assy	Replace Eject Spring Assy (pg. 6-12)	D (Pg.4-9)

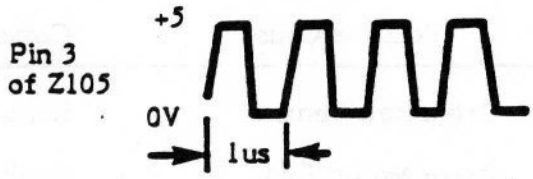

Figure 5-1. 1MHz Clock Signal at Pin 3 of Z 105

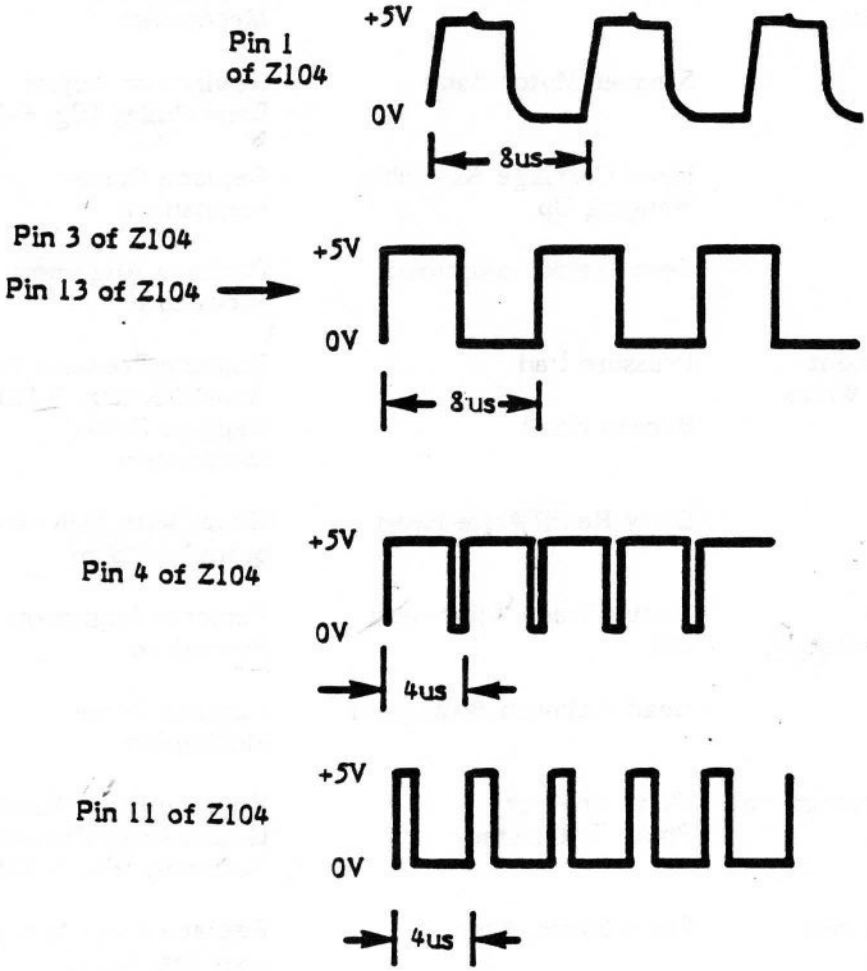

Figure 5-2. Sideboard Read Circuit Waveforms

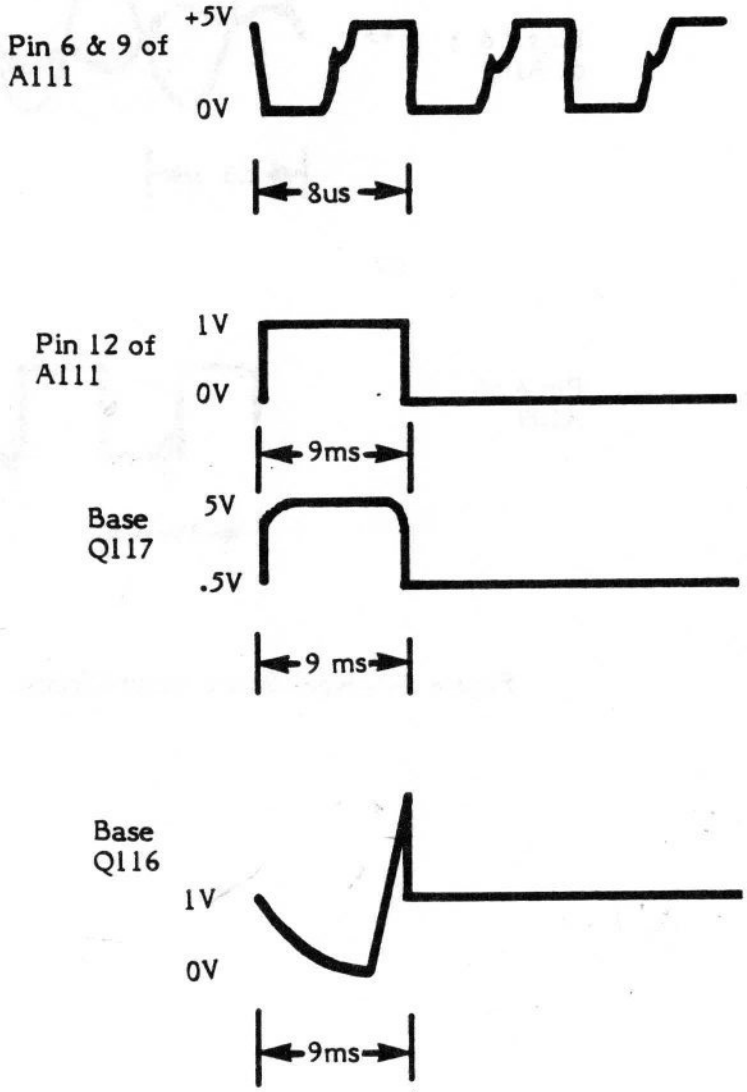

Figure 5-3. Rear Board Write Circuit Waveforms

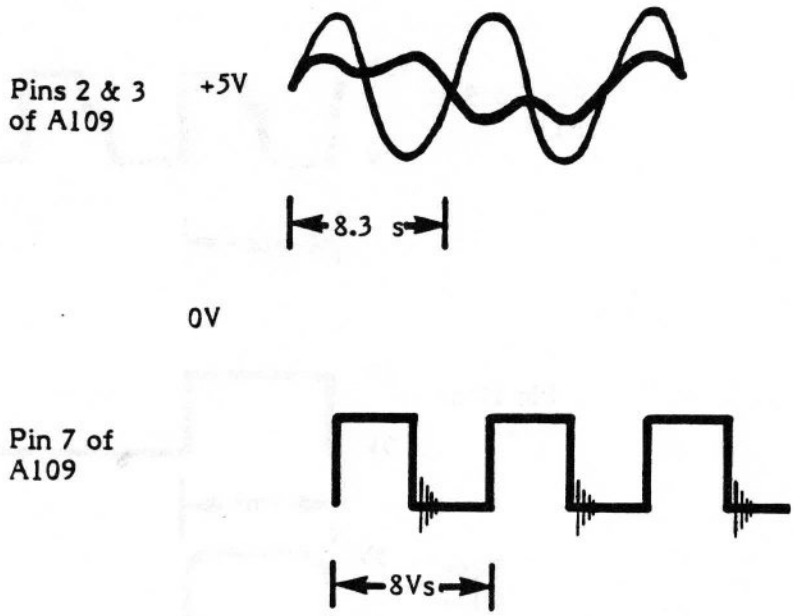

Figure 5-4. Rear Board Read Circuit Waveforms

SECTION 6

DISASSEMBLY/ASSEMBLY

STATIC PROTECTION IN WORK AREA

Large Scale Integrated (LSI) chips can be damaged by static charges in their plastic packaging or by handling in normal work environments. It is necessary to establish a static-free work station. A work station for assembling static-sensitive materials should consist of an anti-stat poly table cover that is grounded to the metal on the table. In addition, the worker at the station should also be grounded, with a wrist strap, to the metal portion of the table. Note that the wrist grounding straps affect only the body of the service person, not the clothing. Therefore, short sleeves are preferred. If long sleeves are worn, they should be covered by an anti-stat gauntlet.

On static-sensitive work surfaces, all plastics except anti-static ones should be forbidden. Vinyl and mylar shop carriers pulled from a stack and laid casually on a board can destroy it. Styrene desoldering devices generate large static charges, particularly when triggered. Practically all plastic and plastic related materials generate tremendous charges and should not be permitted in the same room where static sensitive devices are being assembled or stored.

SAFETY

As with any electronic equipment, precautions consistent with all standard industrial safety practices must be observed while maintaining the ATARI 810 Disk Drive. A current of 10mA can put the human heart in fibrillation and a current of only 100mA can cause it to stop completely. Since human skin resistance is normally about 300 ohms, any voltage in excess of 30 volts can be lethal.

Notices are included throughout this manual to alert you to problem areas or dangerous situations.

A WARNING statement precedes the text of a procedure that, if not strictly observed, could result in injury or death of the service technician.

A CAUTION statement precedes the text of a procedure that, if not strictly observed, could result in damage to or destruction of equipment hardware or software.

A NOTE statement highlights an essential operating or maintenance procedure, condition, or clarifying fact. Notes are also used to provide information that, though not necessary, is helpful to understanding a concept or completion of a procedure.

PREVENTIVE MAINTENANCE

Atari requires each 810 Disk Drive unit which is disassembled to have the following preventive maintenance performed:

- Inspect the Read/Write Head to be certain it is clean. If necessary, clean the area using 91% isopropyl alcohol and a cotton swab.
- Be certain guide rods are free of grease.
- Inspect the pressure pad for excessive buildup of oxides or dirt. If necessary, replace the pressure pad.

PRECAUTIONS

When checking an 810 Disk Drive, take the following precautions:

- Do not use oils or lubricating compounds of any kind on any of the drive's mechanical assembly.
- Do not lift the pressure pad any further from the head carriage than the arm would be lifted during normal disk drive operation.
- Take care if magnetized tools are used, since diskettes are present.

DISASSEMBLY

The disassembly procedure is divided into six levels. These levels are:

- Disk Drive Case Disassembly
- Common Baseplate and Front Panel Removal
- Side PCB and RF Shield Removal
- Rear PCB Removal
- Drive Mechanism Removal
- Drive Mechanism Component Disassembly

Disk Drive Case Disassembly

WARNING: Be sure the unit is unplugged from AC power before opening the outer case.

Use Figure 6-1 as reference for the following five steps.

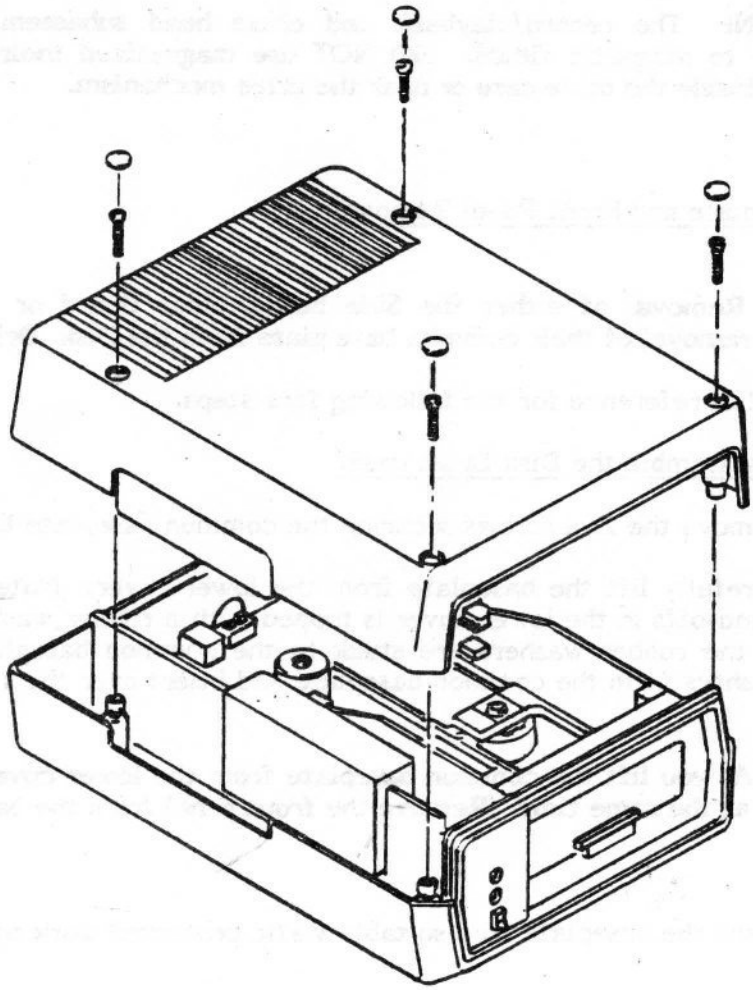

Figure 6-1. Disk Drive Case Disassembly

1. Disconnect the AC transformer power cord from the power jack at the rear of the drive chassis before opening the outer case.

2. Disconnect the data cord from the I/O connectors at the rear of the drive chassis.

3. With the Disk Drive rightside up on a suitable work surface, remove the four adhesive screw hole covers on the top cover.

4. Remove the four screws securing the top cover to the lower cover.

5. Remove the top cover and set it aside.

CAUTION: The record/playback and erase head subassembly is extremely sensitive to magnetic fields. DO NOT use magnetized tools or articles when working inside the drive case or near the drive mechanism.

Common Baseplate and Front Panel Removal

NOTE: Removal of either the Side Board, Rear Board or Drive Mechanism requires removal of their common base plate from the Disk Drive lower cover.

Use Figure 6-2 as reference for the following four steps.

1. Disassemble the Disk Drive case.

2. Remove the five screws securing the common baseplate to the lower cover.

3. Carefully lift the baseplate from the lower cover. Note that each of the stand-offs in the lower cover is topped with a rubber washer. Be sure none of the rubber washers are stuck to the common baseplate. Remove any washers from the common baseplate and insert over the stand-off.

NOTE: As you lift the common baseplate from the lower cover, the front panel lifts out at the same time. Remove the front panel from the baseplate and set it aside.

4. Place the baseplate on a suitable static protected work surface.

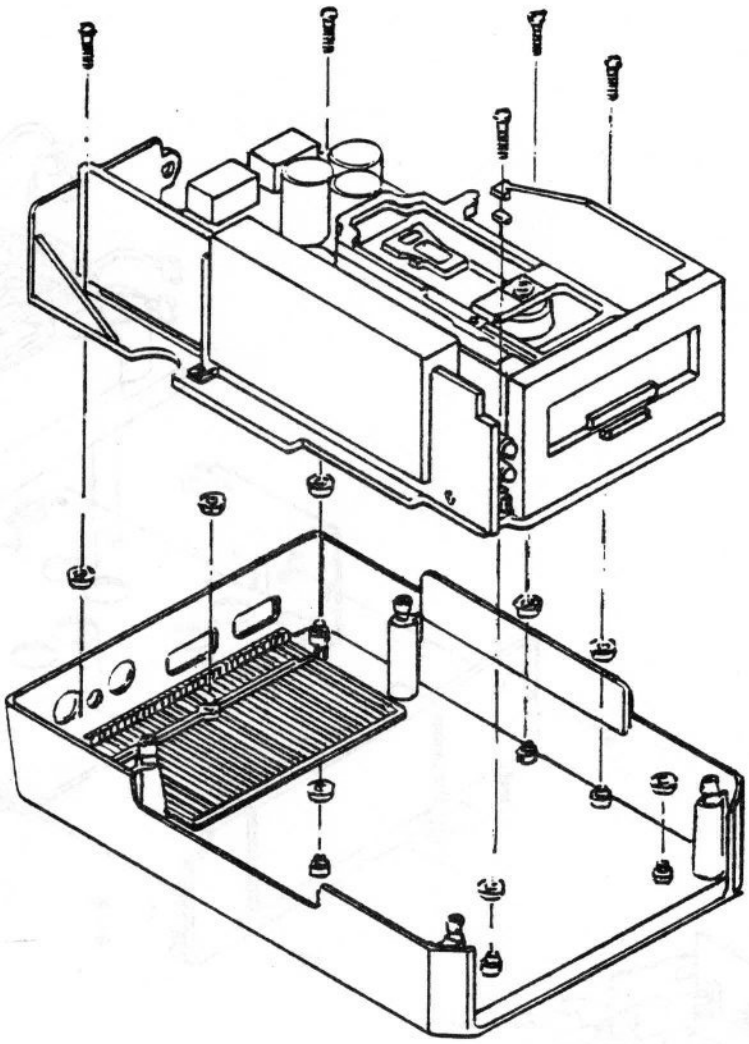

Figure 6-2. Common Baseplate and Front Panel Removal

Side PCB and RF Shield Removal

Use Figure 6-3 as reference for the following nine steps.

1. Disassemble the Disk Drive case.
2. Remove the common baseplate and front panel from the drive lower cover.

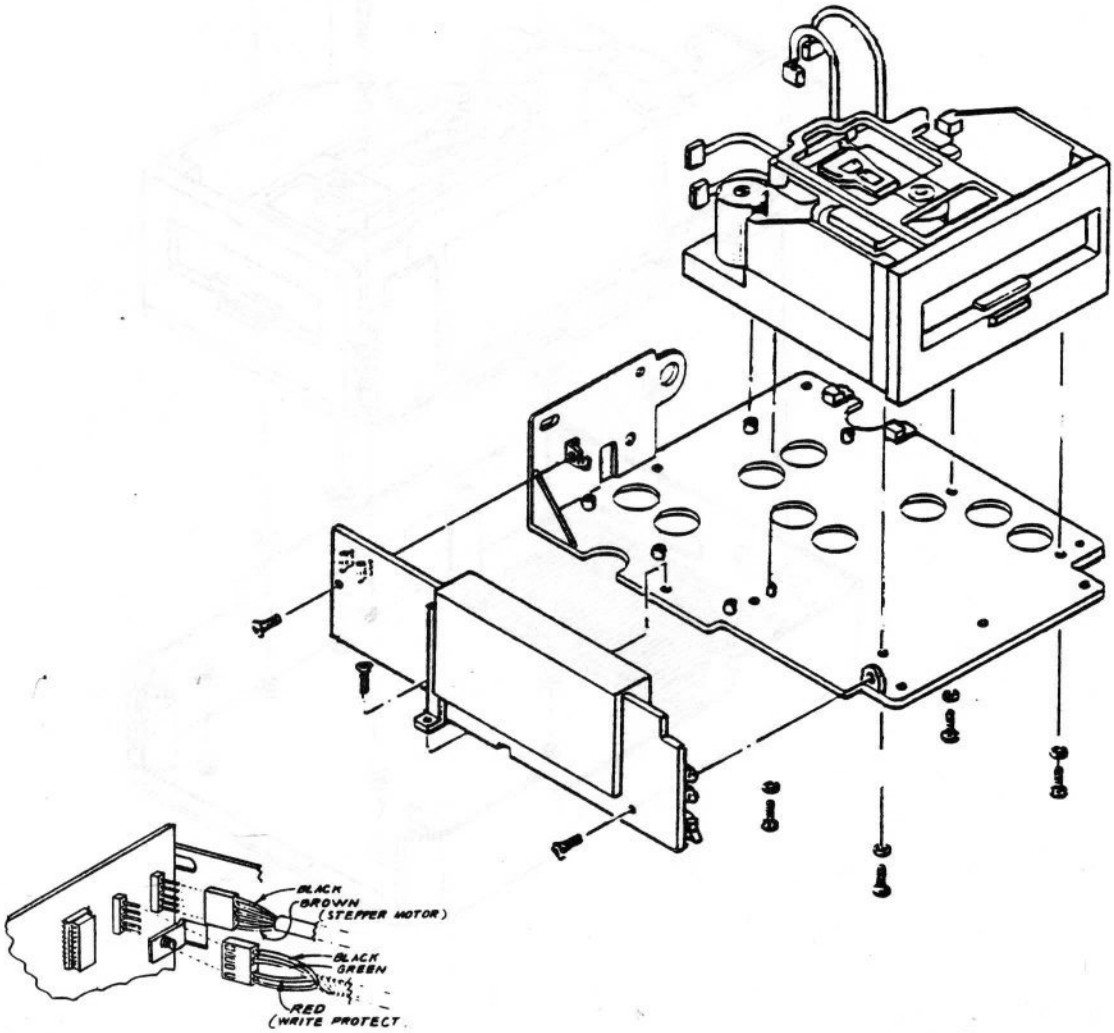

Figure 6-3. Side Board and RF Shield Removal

3. Disconnect the write protect wiring harness - J101 black, green, blank, red, black) from the side board.

4. Disconnect the stepper motor wiring harness - J102 black, white, red, green, brown from the side board.

5. Remove the three screws securing the side board and its center ground bracket to the common baseplate.

6. Grasp the side boardat both its front edge and its upper rear corner. Lift the PCB straight up to disengage its rear jack from the row of pins on the rear board(J106 - rear connector).

NOTE: You may have to rock the PCB slightly to overcome the jack-to-pin tension between the two PCBs.

After removing the Sideboard, be sure all the pins on connector J106 are straight. This prevents damage during reassembly.

7. Carefully straighten the three tabs securing the RF shield case halves together on the side board.

CAUTION: Excessive bending of the metal tabs canbreak them. DO NOT bend the tabs any more than necessary

8. Remove the two screws securing the case halves to the ground bracket and side board.

9. Carefully disengage the case halves from each other and the board. Set the case halves aside. Place the side board on a static protected work surface.

Rear PCB Removal

Use Figure 6-4 as reference for the following eight steps.

1. Disassemble the Disk Drive case.

2. Remove the common baseplate and front panel from the drive lower cover.

3. Remove the side board from the common baseplate.

4. Disconnect the drive motor wiring harness J103 from the rear board.

5. Disconnect the head I/O wiring harness J109 from the rear board.

6. Remove the four screws securing the rear boardto the common baseplate.

7. Grasp the rear board on both side edges. Carefully lift the board straight up far enough to disengage the board's two right side jacks from the six device pins.

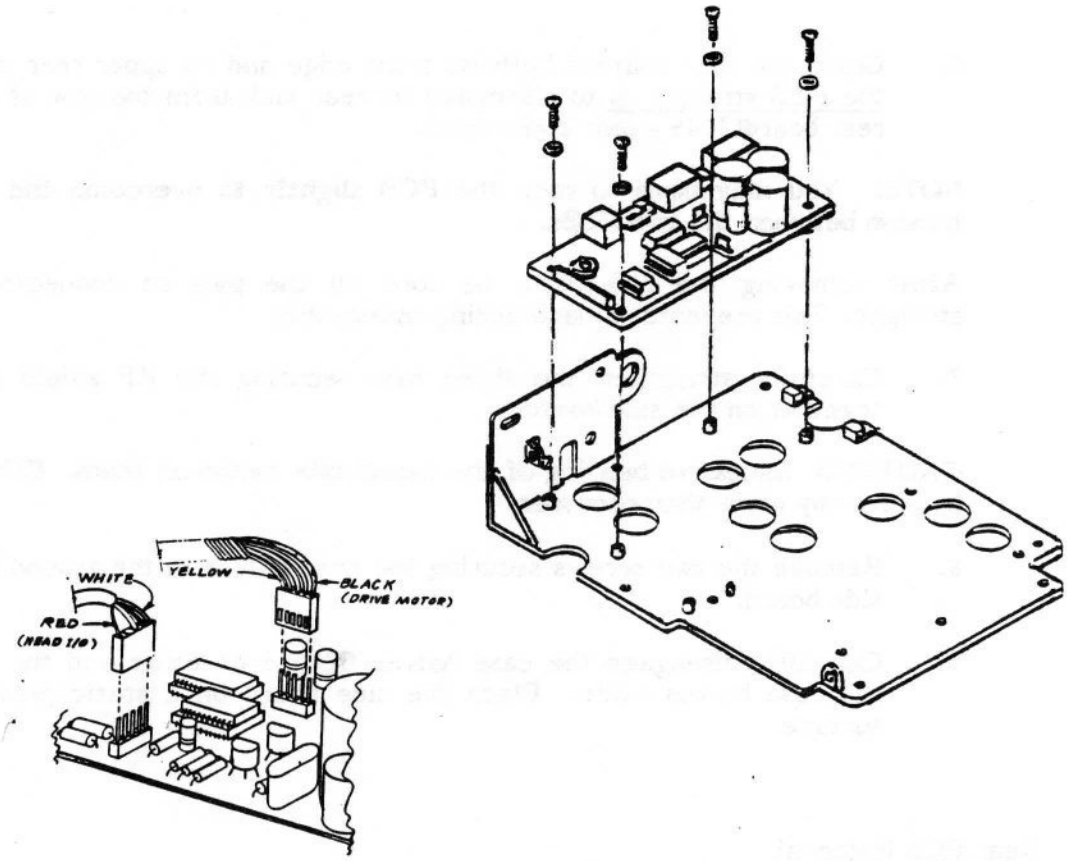

Figure 6-4. Rear board Removal

NOTE: You may have to rock the boardslightly to overcome the jack-to-pin tension between the board and the pins attached to the common baseplate.

8. Lift the rear board away from the baseplate at an angle from the side nearest the Drive Mechanism. Place the rear board on a suitable work surface.

Drive Mechanism Removal

Use Figure 6-5 as reference for the following eight steps.

1. Disassemble the Disk Drive case.

2. Remove the common baseplate and front panel from the drive lower cover.

3. Remove the side board.

4. Remove the rear board.

5. Place the Drive Mechanism assembly upside down, exposing the four screws holding the Drive Mechanism to the common baseplate.

6. Remove the four screws that secure the Drive Mechanism to the baseplate. The screws are accessible only from the underside of the baseplate.

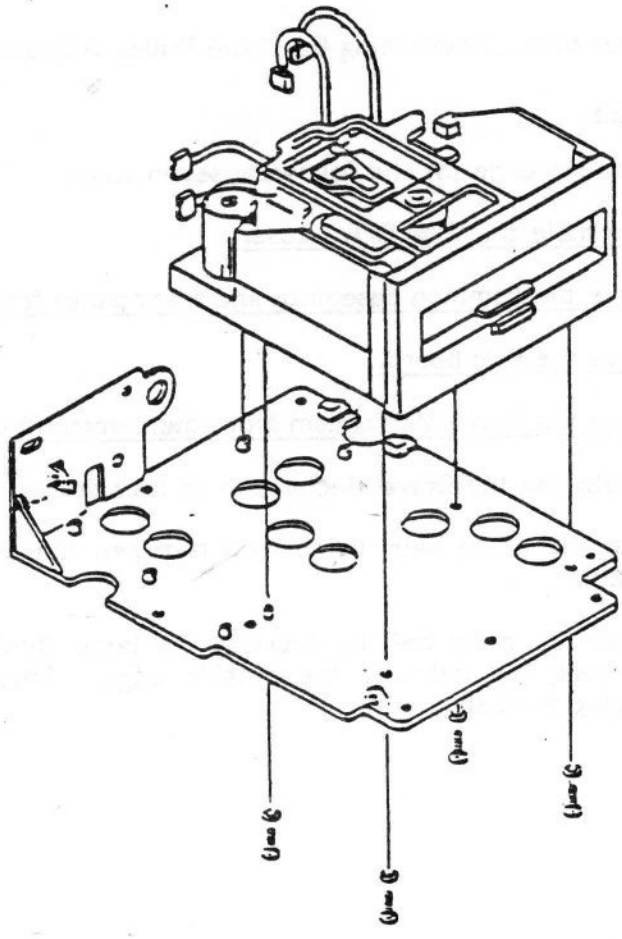

Figure 6-5. Drive Mechanism Removal

CAUTION: The Drive mechanism provides critical mechanical alignments necessary for proper Disk Drive operation. Be very careful not to jar or damage the drive mechanism or any of its associated subassemblies and components.

7. Place the Drive Mechanism and baseplate on a suitable work surface.

8. Separate the Drive Mechanism and common baseplate.

DRIVE MECHANISM COMPONENT DISASSEMBLY

Use the following procedures to disassemble the Drive Mechanism to replace individual components. The procedures described are:

- Drive Belt Removal
- Stepper Motor Positioning Band and Pulley Adjustment or Replacement

Drive Belt Removal

Use Figure 6-6 as reference for the following seven steps.

1. Disassemble the Disk Drive case.

2. Remove the common baseplate and front panel from the drive lower cover.

3. Remove the side board.

4. Remove the Drive Mechanism from the common baseplate

5. Carefully lay the Drive Mechanism on its side.

6. Locate the drive belt which runs between the drive motor pulley to the flywheel.

7. Remove the drive belt by rotating the large flywheel (marked for strobe) and easing the belt off the outside edge. This prevents stretching or damaging the belt.

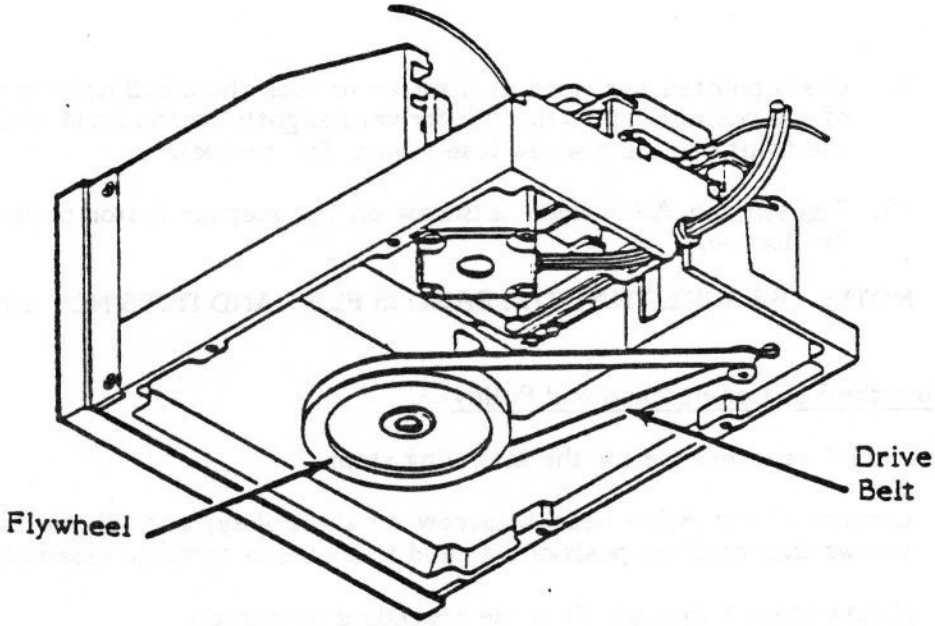

Figure 6-6. Drive Belt Removal

To Replace Stepper Motor Positioning Band and Pulley

NOTE: AFTER ADJUSTMENT OR REPLACEMENT OF THE STEPPER MOTOR POSITIONING BAND AND PULLEY, THE HEAD MUST BE ALIGNED.

Use Figure 6-7 as reference for the following 10 steps.

1. Remove the front and rear screws, washers and brackets that hold the positioning band to the head carriage assembly.

2. Loosen the Allen head setscrew and lift the positioning band and pulley from the stepper motor drive shaft.

3. Carefully install the new positioning band and pulley over the stepper motor drive shaft. Do not tighten the setscrew at this time.

4. Replace, but do not tighten the rear screw, washer and bracket that holds the positioning band to the head carriage assembly.

5. Align the front screw hole of the positioning band with the screw hole on the head carriage assembly.

6. Install the front screw, washer and bracket, but do not tighten.

7. Gently slide the head carriage assembly back and forth on the guide rods. This will center the band pulley on the stepper motor shaft.

8. Tighten the rear band retaining screw (use 6 inch lbs. torque).

9. Use a pointed tool such as a scribe to hook the small hole on the front end of the positioning band. Pull forward slightly on the band while tightening the front retaining screw (use 6 inch lbs. torque).

10. Tighten the Allen head setscrew on the stepper motor pulley (use 2 inch lbs. torque).

NOTE: BE SURE THAT THE BAND IS FLAT AND DOES NOT BIND.

To Adjust the Positioning Band and Pulley

Use Figure 6-7 as reference for the following steps.

Loosen: 1) the Allen head setscrew on the pulley; and, 2) the front and rear screws that hold the positioning band to the head carriage assembly.

Follow steps 7 through 10 in the preceding paragraph.

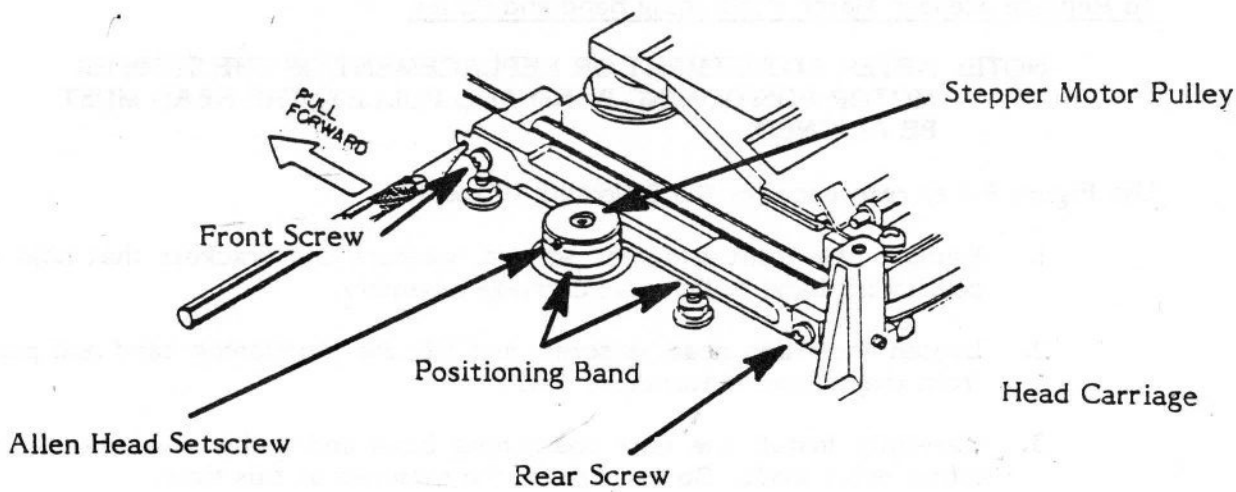

Figure 6-7. Positioning Band and Pulley Replacement

To Replace Eject Spring Assembly

1. To replace top latch release spring:

   -- Remove the screw which holds the top latch release spring to the carrier assembly.

   -- Remove the top latch release spring and replace it with a new one.

   -- Insert and tighten the screw which holds it to the carrier assembly.

2. To replace the latch retaining spring:

   -- Remove the screw which holds the latch retaining spring to the Drive Mechanism.

   -- Remove the latch retaining spring and replace it with a new one. Be sure that it is flat. **DO NOT BEND THE SPRING.**

   -- Insert and tighten the screw which holds it to the Drive Mechanism.

3. To replace the Ejector Block:

   -- Loosen the setscrew on the bottom of the Drive Mechanism (in front of Stepper Motor).

   -- Remove the rod, spring and ejector block from the guides and replace them. Be sure that both ends of the new rod are even with the guides in the Drive Mechanism.

   -- Tighten the setscrew on the bottom of the Drive Mechanism.

To Replace the Right Hand Guide/Write Protect Assembly

1. Remove the two screws which hold the assembly to the Drive Mechanism.

2. Remove the upper screw which holds the assembly to the front bezel.

3. Disconnect the two wiring harnesses from the assembly. **Be sure to note polarity.**

NOTE: Black and green on top. Red and black on bottom.

4. Remove the assembly and replace it with a new one.

5. Connect the two wiring harnesses to the new assembly. **Be sure polarity is correct.**

6. Insert and tighten the upper screw which holds the assembly to the front bezel.

7. Insert and tighten the two screws which hold the assembly to the Drive Mechanism.

ASSEMBLY

The Assembly Procedure is divided into six levels. These levels are:

- Rear Board Assembly
- Drive Mechanism Component Assembly
- Drive Mechanism Assembly
- Side Board Assembly

- Common baseplate and front panel assembly.
- Disk Drive Case Assembly

WARNING: Be sure the unit is unplugged from the AC power before reassembling to any level.

Rear PCB Assembly

Use Figure 6-4 as reference for the following three steps.

1. Align the connectors J104 and J105 (on the rear board) with the pins on the voltage regulators (common baseplate).
2. Firmly press the connectors onto the pins, aligning the four screw holes with the common baseplate.
3. Insert and tighten the four screws which hold the rear board to the common baseplate.

DRIVE MECHANISM COMPONENT ASSEMBLY

Use the following procedures to replace or adjust components. The procedures are:

- Stepper Motor Positioning Band and Pulley Replacement or Adjustment (Page 6-11).
- Drive Belt Assembly

Drive Belt Assembly

Use Figure 6-6 as reference for the following three steps.

1. Lay the Drive Mechanism on its side.
2. Place the drive belt around the drive motor pulley.
3. Position the drive belt around the flywheel until the belt tightens. Carefully ease the belt onto the flywheel while rotating the flywheel.

Drive Mechanism Assembly

Use Figure 6-5 as reference for the following seven steps.

1. Carefully set the Drive Mechanism upside down on a clean, flat surface with the drive door facing toward you.
2. Place the common baseplate over the Drive Mechanism aligning the screw holes to the Drive Mechanism.
3. Center the flywheel in the large hole in the common baseplate.
4. Insert and tighten the four screws holding the common baseplate to the Drive Mechanism.

5. Turn the assembly right side up to connect the wiring harnesses.

6. Connect the Drive Motor Harness (yellow, blank, blue, red, black) to the rear PCB-J103.

7. Connect the Head I/O Harness (red, blank, blue, white, black) to the rear PCB-J109.

Side PCB and RF Shield Assembly

Use Figure 6-3 as reference for the following eight steps.

1. Place the RF shield halves on the side PCB as shown in Figure 6-3.

2. Align the two screw holes on the ground bracket with the holes on the RF Shield case halves and the side PCB.

3. Insert and tighten the two screws securing the ground bracket to the case halves and the side PCB.

4. Align the connector J106 (Side Board) over the row of pins on the rear board.

5. Firmly press the connector onto the pins, aligning the screw holes with the common base plate.

6. Insert and tighten the three screws holding the side board and center ground bracket to the common baseplate.

7. Connect the Stepper Motor wiring harness (black, white, red, green, brown) to the side board - J102

8. Connect the Write Protect wiring harness (black, green, blank, red, black) to the side board.

Common Baseplate and Front Panel Assembly

Use Figure 6-2 as reference for the following six steps.

1. Place common baseplate in the lower cover.

2. Align the five screw holes in the common baseplate with the screw holes in the lower cover.

3. Grasp the front panel bezel and lift the front of the baseplate approximately one inch from the lower cover.

4. Place the front panel over the front panel bezel - align the openings over the BUSY light, Power Light, and Power ON/OFF switch.

5. Lower the Common Baseplate and slide the front panel into the notches at the side of lower cover.

6. Replace the five screws securing the common baseplate to the lower cover.

Disk Drive Case Assembly

Use Figure 6-1 as reference for the following five steps.

1. Place the top cover over the Drive Mechanism, aligning the two covers.
2. Replace the four screws in the holes on the top cover.
3. Place the hole cover labels over the four holes.
4. Insert the data cord into the I/O Connector on the rear of the disk drive.
5. Connect the AC power cord into the power jack at the rear of the drive chassis.

ATARI 810 DISK DRIVE PRE-ANALOG
PARTS LIST

Assy	Part No.	Description	Item No.
	C014319	AC POWER ADAPTOR	EARLY UNIT
	CA017964	AC POWER ADAPTOR (NEW UNIT) (PKGD.)	PLUGS INTO WALL ELECTRICAL OUTLET
	C017945	AC POWER ADAPTOR (NOT PKGD.)	
BOTTOM	88-1004	RUBBER FEET	(ALT FOR P/N C016848)
BOTTOM	88-1010	MOUNTING PAD	
BOTTOM	C014324	BOSS FASTENER	
BOTTOM	C016848	FOOT PLUG	(ALT LISTED)
BOTTOM	CA014158	LOWER ASSY	
BOTTOM	CA014318	FASTENER BASE ASSY	
DATA SEP	14-5103	RESISTOR 10K	R202
DATA SEP	14-5182	RESISTOR 1.8K	R200,201
DATA SEP	14-5221	RESISTOR 220 OHM	R205
DATA SEP	14-5472	RESISTOR 4.7K	R206
DATA SEP	14-5473	RESISTOR 47K	R203,204
DATA SEP	31-1N914	DIODE 1N914	CR200 (ALT. FOR CO60607)
DATA SEP	34-2N3904	TRANSISTOR 2N3904	Q200
DATA SEP	C014179-08	CAP. CERAMIC AXIAL 82PF (50V)	C201
DATA SEP	C014181-01	CAP. CERAMIC AXIAL .001UF (25V)	C208
DATA SEP	C014181-02	CAP. CERAMIC AXIAL .01uF (25V)	C203,205,207
DATA SEP	C014181-03	CAP. CERAMIC AXIAL .1uF (25V)	C200,202,204,206
DATA SEP	C014329	IC FDC 1771	A203 (DATA SEP INSTALLED)
DATA SEP	C014384	INDUCTOR FERRITE BEAD	L200
DATA SEP	C014386-02	SOCKET IC (14 PIN)	XA201,205,207,208
DATA SEP	C014386-03	SOCKET IC (16 PIN)	XA204,206
DATA SEP	C014386-09	SOCKET IC (40 PIN)	XA203
DATA SEP	C016018	CRYSTAL 4.000000 MHz (NYMPH 040)	X200
DATA SEP	C016045	IC 74LS74	A201,207
DATA SEP	C017096	IC 74LS04	A208
DATA SEP	C017097	IC 74LS08	A205
DATA SEP	C017100	IC 74LS193	A204,206
DATA SEP	C017511	SHIELD INSULATOR PAD	
DATA SEP	C017521	DIP HEADER (40 PIN)	P103
DATA SEP	CA017231	PC BOARD DATA SEPARATOR	
DATA SEP	CO60607	DIODE (1N4148)	CR200 ALT LISTED
DISK DR.	CA014072	DISK DRIVE ASSY MPI	
FINAL	CA014156-02	ATARI HCD 810 DISK DRIVE ASSY	NOT PKGD. (UNIT WITH MPI DISK DRIVE ASSY)
MOUNT	78-74001	CABLE TIE	
MOUNT	C012972	COMMON BASE	
MOUNT	C014348	VOLTAGE REGULATOR (5V)(78MO5)	A108
MOUNT	C014786	PASS TRANSISTOR (TIP 32C)	Q113
MOUNT	C014712	VOLTAGE REGULATOR 7812 (12V)	
MOUNT	C017194	MOUNTING PLATE COMMON	
MOUNT	CA014160	MOUNTING PLATE ASSY	UNIT WITH MPI DRIVE MECHANISM
MOUNT	C014138	GROUND BRACKET	

ATARI 810 DISK DRIVE PRE-ANALOG
PARTS LIST

Assy	Part No.	Description	Item No.
PANEL	C012976	DISK PANEL PRIMARY	MPI UNIT
PANEL	CA014159	PANEL ASSY (FRONT)	MPI UNIT
REAR	14-5101	RESISTOR 100 OHM	R138,147,162, 163,174
REAR	14-5102	RESISTOR 1K	R137,149,151, 154,156
REAR	14-5103	RESISTOR 10K	R140,143,152,153 157,158,165,166
REAR	14-5104	RESISTOR 100K	R175,176
REAR	14-5105	RESISTOR 1 MEG	R144
REAR	14-5132	RESISTOR 1.3K	R167
REAR	14-51R1	RESISTOR 1.1 OHM	R139
REAR	14-5202	RESISTOR 2K	R150
REAR	14-5220	RESISTOR 22 OHM	R173
REAR	14-5221	RESISTOR 220 OHM	R141
REAR	14-5222	RESISTOR 2.2K	R145,159,160,171
REAR	14-5241	RESISTOR 240 OHM	R148
REAR	14-5331	RESISTOR 330 OHM	R146
REAR	14-5332	RESISTOR 3.3K	R155
REAR	14-5333	RESISTOR 33K	R177
REAR	14-5392	RESISTOR 3.9K	R161
REAR	14-5472	RESISTOR 4.7K	R164,168
REAR	14-5751	RESISTOR 750 OHM	R170
REAR	14-5752	RESISTOR 7.5K	R169
REAR	15-5360	RESISTOR 36 OHM	R172
REAR	19-411504	RESISTOR VARIABLE 500K	R142
REAR	21-101474	CAP. MYLAR FILM .47uF (100V)	C152
REAR	31-1N4001	DIODE 1N4001	CR109,115-118
REAR	31-1N914	DIODE 1N914	CR110,119,120 (ALT FOR P/N C060607)
REAR	34-2N3904	TRANSISTOR 2N3904	Q116,117
REAR	CA014833	REARBOARD ASSY	
REAR	CA015326	TRANSISTOR HEATSINK ASSY	Q112
REAR	FC100027	TRANSISTOR ARRAY	A107,110*

*USE ON PRE-ANALOG 810'S WITHOUT DATA SEP.

REAR	C016821	TRANSISTOR ARRAY	A107,110** (MUST NOT BE RCA BRAND PARTS)

**USE ON PRE-ANALOG 810'S WITH DATA SEP.

REAR	C010174	TRANSISTOR ARRAY	111 (MUST NOT BE RCA BRAND PARTS)
REAR	C010394	CAP. POLY FILM .22UF (100V)	C145,158 (ALT LISTED)
REAR	C012995	CONNECTOR RT ANGLE (13 PIN)	J107,108
REAR	C014179-08	CAP. CERAMIC AXIAL 82PF (50V)	C159
REAR	C014180-05	CAP. CERAMIC AXIAL 220PF (50V)	C153
REAR	C014180-08	CAP. CERAMIC AXIAL .0047uF (50V)	C157
REAR	C014181-01	CAP. CERAMIC AXIAL .001uF (25V)	C120,154-156
REAR	C014181-02	CAP. CERAMIC AXIAL .01uF (25V)	C147
REAR	C014181-03	CAP. CERAMIC AXIAL .1uF (25V)	C144,161,163
REAR	C014181-05	CAP. CERAMIC AXIAL .22uF (25V)	C145,158, (ALT FOR P/N C010394)

ATARI 810 DISK DRIVE PRE-ANALOG
PARTS LIST

Assy	Part No.	Description	Item No.
REAR	C014351	TRANSISTOR	Q112 (PART OF)
REAR	C014332	IC LM311N	A109
REAR	34-2N3904	TRANSISTOR 2N3904	Q116,117
REAR	C014368	CAP. ELEC RADIAL 470uF (16V)	C150,151
REAR	C014386-01	SOCKET IC (8 PIN)	XA109
REAR	C014386-02	SOCKET IC (14 PIN)	XA107,110,111
REAR	C014392	CAP. ELEC RADIAL 10uF (16V)	C143,160
REAR	C014394	TRANSISTOR MPS-A06	Q114,115
REAR	C014398	DIODE MR501	CR111-114
REAR	C014703	INDUCTOR 680uH	L103
REAR	C014715	POWER JACK	J110
REAR	C014716-03	CONNECTOR (3 PIN)	J104,105
REAR	C014719-02	CONNECTOR (5 PIN)	J103,109
REAR	C014719-03	CONNECTOR (23 PIN)	J106
REAR	C014725	SWITCH LOGIC	S101
REAR	C014780	CAP. ELEC RADIAL 4700uF (25V)	C146,148,149
REAR	C014798	HEATSINK	Q112 (PART OF)
REAR	C014796	RIVET NYLON	Q112 (PART OF) (ALT FOR P/N C015344)
REAR	C015344	RIVET NYLON	(ALTERNATE LISTED)
REAR	C015505	CAP. ELEC RADIAL 47uF (16V)	C142
SIDE	14-5102	RESISTOR 1K	R118,121-124,129
SIDE	14-5103	RESISTOR 10K	R105,109,113,134
SIDE	14-5104	RESISTOR 100K	R135,136
SIDE	14-5151	RESISTOR 150 OHM	R117
SIDE	14-5152	RESISTOR 1.5K	R114
SIDE	14-5153	RESISTOR 15K	R108,112
SIDE	14-51R1	RESISTOR 1.1 OHM	R125
SIDE	14-5221	RESISTOR 220 OHM	R103
SIDE	14-5224	RESISTOR 220K	R127
SIDE	14-5271	RESISTOR 270 OHM	R120,126
SIDE	14-5273	RESISTOR 27K	R131
SIDE	14-5331	RESISTOR 330 OHM	R132
SIDE	14-5332	RESISTOR 3.3K	R115
SIDE	14-5333	RESISTOR 33K	R111
SIDE	14-5393	RESISTOR 39K	R104
SIDE	14-5471	RESISTOR 470 OHM	R106
SIDE	14-5472	RESISTOR 4.7K	R110,116,128,133
SIDE	14-5473	RESISTOR 47K	R119,130
SIDE	14-5562	RESISTOR 5.6K	R101,102
SIDE	14-5750	RESISTOR 75 OHM	R175
SIDE	31-1N4001	DIODE 1N4001	CR101-104, 106
SIDE	31-1N914	DIODE 1N914	CR120,121,122
SIDE	C018991	TRANSISTOR 2N3906	Q101,103,104
SIDE	34-2N3904	TRANSISTOR 2N3904	Q102,105,110,111
SIDE	C010174	TRANSISTOR ARRAY	A106
SIDE	CA014834	PC BOARD SIDE ASSY. (DATA SEP. INSTALLED)	

ATARI 810 DISK DRIVE PRE-ANALOG PARTS LIST

Assy	Part No.	Description	Item No.
SIDE	CA015325	LED AND STANDOFF ASSY	CR105,108
SIDE	C010447	TRANSISTOR ARRAY 4077	Z104
SIDE	C010745	IC MPU 6507	A101
SIDE	C010750	IC PIA 6532	A104
SIDE	C011299	IC CUSTOM ROM	A102
SIDE	C011465-01	HEX CMOS INVERTER 4069	Z103
SIDE	C014069	STANDOFF LED	CR105,108 (PART OF)
SIDE	C014136	RF SHIELD INSIDE	
SIDE	C014137	RF SHIELD OUTSIDE/TRACE	
SIDE	C014179-02	CAP. CERAMIC AXIAL 47PF (50V)	C101,103,119,131
SIDE	C014179-03	CAP. CERAMIC AXIAL 10PF (50V)	C122
SIDE	C014179-04	CAP. CERAMIC AXIAL 33PF (50V)	C141
SIDE	C014179-07	CAP. CERAMIC AXIAL 62PF (50V)	C105
SIDE	C014180-03	CAP. CERAMIC AXIAL 100PF (50V)	C110,130,139,140
SIDE	C014180-07	CAP. CERAMIC AXIAL 470PF (50V)	C106
SIDE	C014180-10	CAP. CERAMIC AXIAL 390PF (50V)	C111
SIDE	C014181-01	CAP. CERAMIC AXIAL .001uF (25V)	C113,116-118 123-129,134-138
SIDE	C014181-03	CAP. CERAMIC AXIAL .1uF (25V)	C102,104,107-109 114,115,133
SIDE	C014316	CRYSTAL 1 MHz	X101
SIDE	C014328	TRANSISTOR ARRAY 6810	A103
SIDE	C014329	IC FDC 1771	A105
SIDE	C014333	TRANSISTOR ARRAY 4011	Z102
SIDE	C014334	TRANSISTOR ARRAY 4013	Z101,105
SIDE	C014369	CAP. ELEC RADIAL 4.7uF (35V)	C132
SIDE	C014379	RESISTOR NETWORK (9 x 4.7K)	R176
SIDE	C014384	INDUCTOR FERRITE BEAD	L102,103
SIDE	C014386-02	SOCKET IC (14 PIN)	XA106,XZ101-105
SIDE	C014386-07	SOCKET IC (24 PIN)	XA102,103
SIDE	C014386-08	SOCKET IC (28 PIN)	XA101
SIDE	C014386-09	SOCKET IC (40 PIN)	XA104,105
SIDE	C014394	TRANSISTOR MPS-A06	Q106-109
SIDE	C014397-01	SWITCH POWER	S102
SIDE	C014702	INDUCTOR AXIAL LEAD 470uH	L101
SIDE	C014717-01	CONNECTOR (23 PIN)	P101
SIDE	C014777	DIODE LED	CR105,108 (PART OF)
SIDE	C014719-02	CONNECTOR (5 PIN)	J101,102
SIDE	C014808-01	DIODE ZENER (5.1V) IN5231B	CR107
SIDE	C017520	SOCKET DIP (40 PIN)	J103
SIDE	CO60607	DIODE (1N4148)	CR120,121,122 (ALT LISTED)
TOP	CA014157	UPPER ASSY	
TOP	C014105	PANEL LABEL COVER	
TOP	C014106	HOLE COVER LABEL	
DISK DRIVE	FC100031	MPI DRIVE BELT	
DISK DRIVE	FA100032	MPI LOAD PAD ASSEMBLY	
DISK DRIVE	FA100033	MPI RT. HAND GUIDE/WRITE PROTECT ASSY	

ATARI 810 DISK DRIVE PRE-ANALOG
PARTS LIST

Assy	Part No.	Description	Item No.
DISK DRIVE	FA100035	MPI EJECTOR ASSY	
DISK DRIVE	FA100034	MPI BAND/PULLEY ASSY	

APPENDIX A

ATARI 810 DISK DRIVE

Mechanical and Electrical Specifications

Height	4.5 Inches
Width	9.5 Inches
Depth	12 Inches
Weight	5 Pounds
Power Adaptor	
Input	120 Volts AC, 60 Hz
Output	9 Volts AC, 1.7 Amps
Power Usage	20 Watts
Approvals	UL and CSA
Clocking Frequency	1 MHz Crystal Controlled Oscillator
Media	ANSI Standard 5.25" Floppy Diskette
Track Density	48 TPI
Recording Density	2,938 BPI. (MAX)
Flux Density	5,876 FCI. (MAX)
Recording Format	
	Single Sided Single Density (128 Bytes/Sector) FM Encoding Method Soft Sectored 40 Tracks (18 Sectors/Track) Total of 720 Sectors
Disk Rotational Speed	288 RPM ± 1%

Mechanical and Electrical Specification (Cont)

Average Latency	100 Milliseconds
Read/Write Head Gap	.013 Inches
Guard Band	.008 Inches
Average Data Transfer Rate	6K Baud (19.2K Baud max.)
Pad Pressure	17 Grams
Head Life	20,000 Hours (Normal Use)
Media Life	3×10^6 Passes On A Single Track
Power-up Delay	0.5 Seconds
Minimum Data Access Time	236 Milliseconds
Head Loading Time	35 Milliseconds
Head Settling Time	15 Milliseconds
Track to Track Access Time	5 Milliseconds
Temperature	
Operating	0 to 50 Degrees Centigrade
Non-Operating	-45 to 71 Degrees Centigrade
Relative Humidity	
Operating	8% to 80% (Non-Condensing)
Non-Operating	8% to 90% (Non-Condensing)
Altitude	
Operating	-500 Feet to 10,000 Feet
Non-Operating	-1,000 Feet to 50,000 Feet
MTBF	9,000 Hours
MTTR	1 Hour

APPENDIX B
810 ANALOG DISK DRIVE

Overview

Appendix B provides the information necessary to troubleshoot and repair the Atari 810 Analog Disk Drive. Included in this appendix are: 810 Analog Disk Drive Silkscreens/Schematics, complete Diagnostic Flowcharts, Disassembly/Assembly instructions, a complete Parts List and Mechanical/Electrical specifications.

Changes in the Analog Disk Drive are:

1. A Power Supply Board now bolts onto the common baseplate where the Rear Board used to be. The Power Supply Board contains:

   a) a redesigned Power Supply.

   b) a Tachometer/Speed Switch I.C. (frequency to voltage converter) added as the Tach circuit to stabilize the motor speed.

2. An Analog Board now bolts to the top of the Drive Mechanism. This board contains the Analog circuitry which used to be on the Rear Board. The major changes are to the Read/Write circuitry. The Analog Board contains:

   a) op-amps and discrete transistors in place of transistor arrays.
   b) a multiplexor chip for switching the Read/Write amplifiers.

3. a 10 pin flat cable connects the Analog Board to the Power Supply Board. Note: for plug orientation, red wire is on pin 1.

The 810 Analog Disk Drive uses the same Diagnostic Tests as the original 810 Disk Drive but requires different flowcharts because component location is different.

NOTE: For the Alignment Program, hook oscilloscope or frequency counter probes to Test Points 2 and 3 on the Analog Board.

When a flowchart instructs you to perform a specific test, you are referred to Section 3, 810 Disk Drive Field Service Manual. Section 3 reviews all the tests needed to diagnose possible problems in both original 810 Disk Drive units and 810 Analog Disk Drive units.

When a line in the flowchart terminates with a letter inside a circle, note that a page number is near it. Turn to that page within this appendix and continue the diagnosis. All the flowcharts needed to diagnose possible 810 Analog Disk Drive problems are complete in this Appendix.

SILKSCREENS AND SCHEMATICS

On the following pages are representative silkscreens and schematics for the ATARI 810 Analog Disk Drive. Minor variations in design may be encountered depending on the production date of the unit, but these schematics provide all details required for an in-depth understanding of ATARI 810 Analog Disk Drive Units.

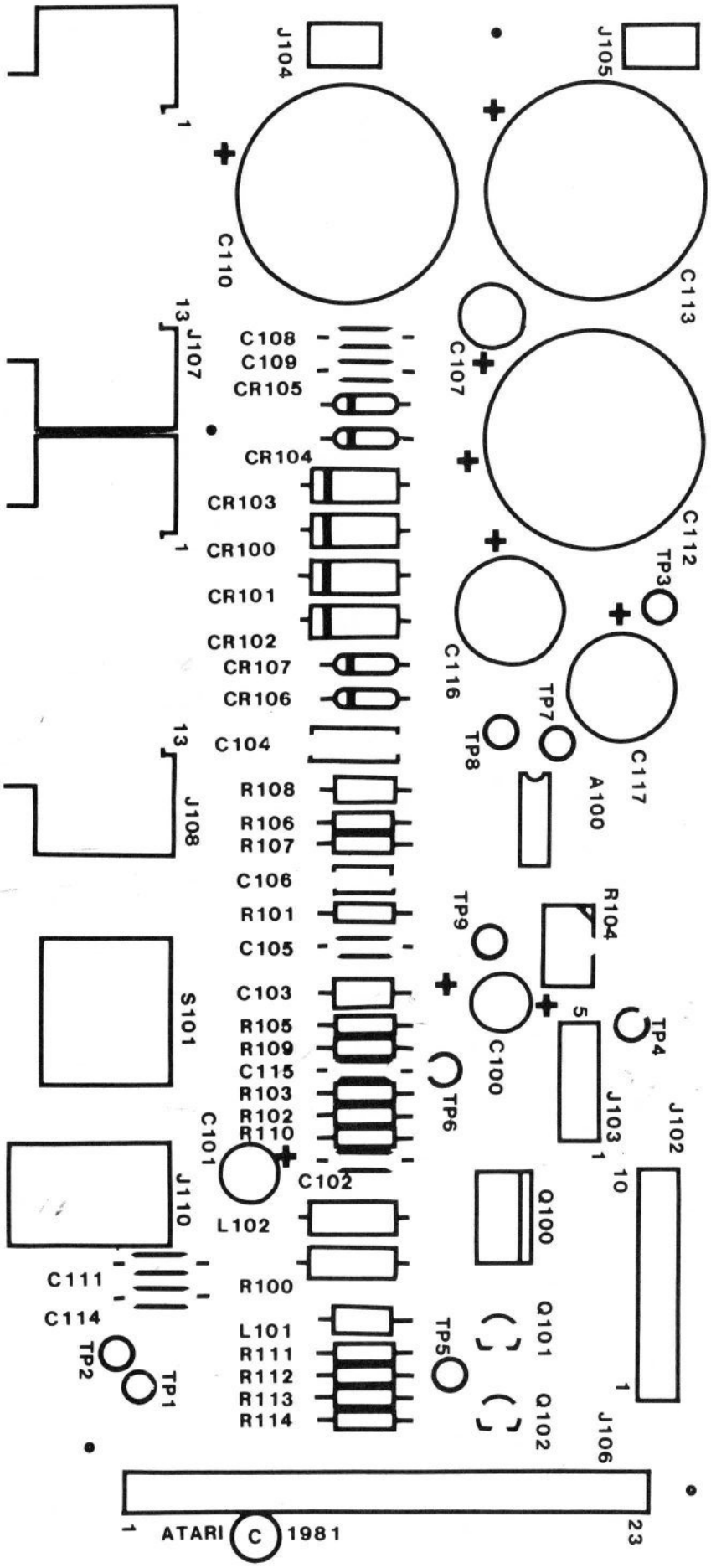

810 Power Supply Silkscreen

ATARI 810 Disk Drive

Figure 8B-1

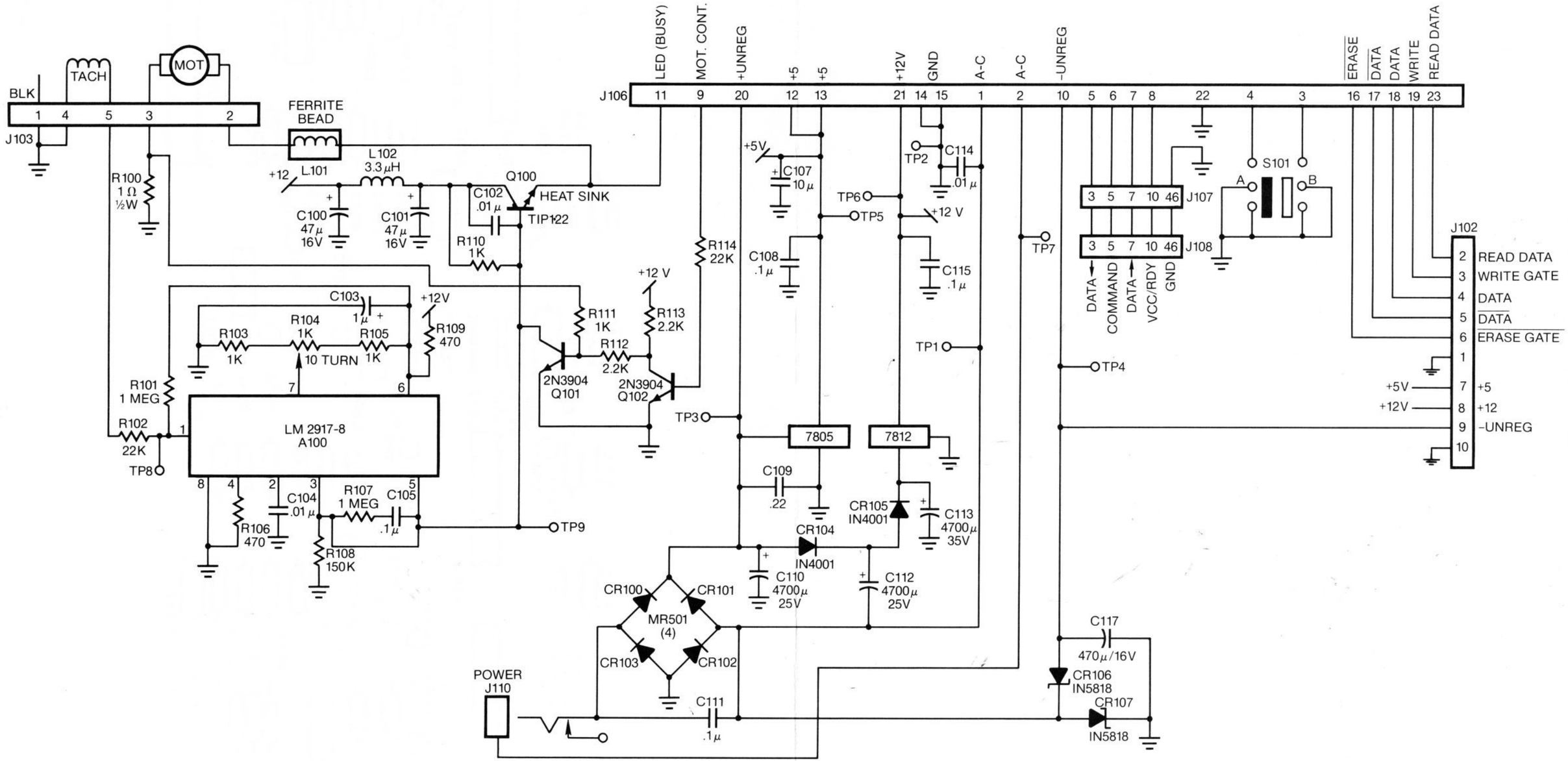

810 Power Supply Schematic

Figure 8B-2

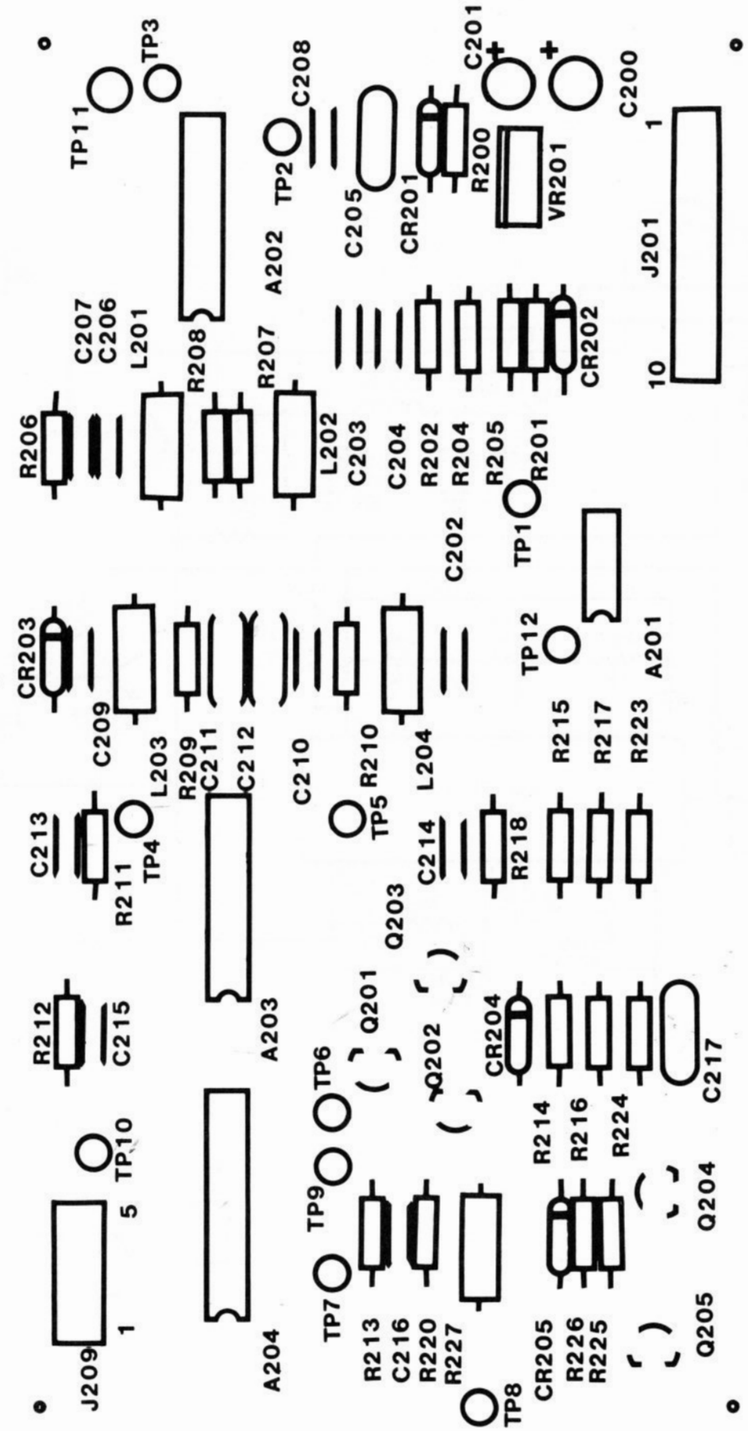

810 Analog Board Silkscreen

Figure 8B-3

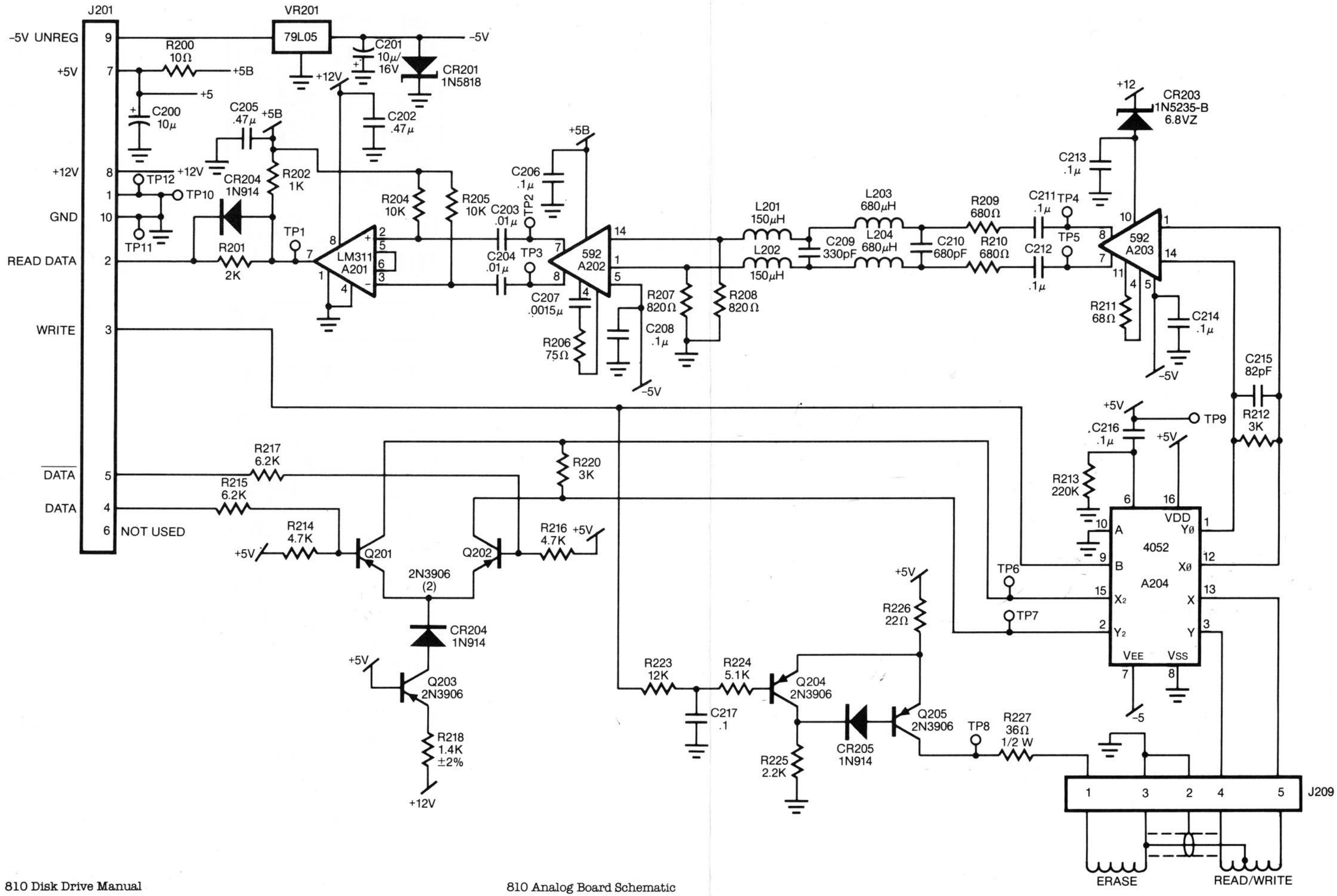

810 Analog Board Schematic

Figure 8B-4

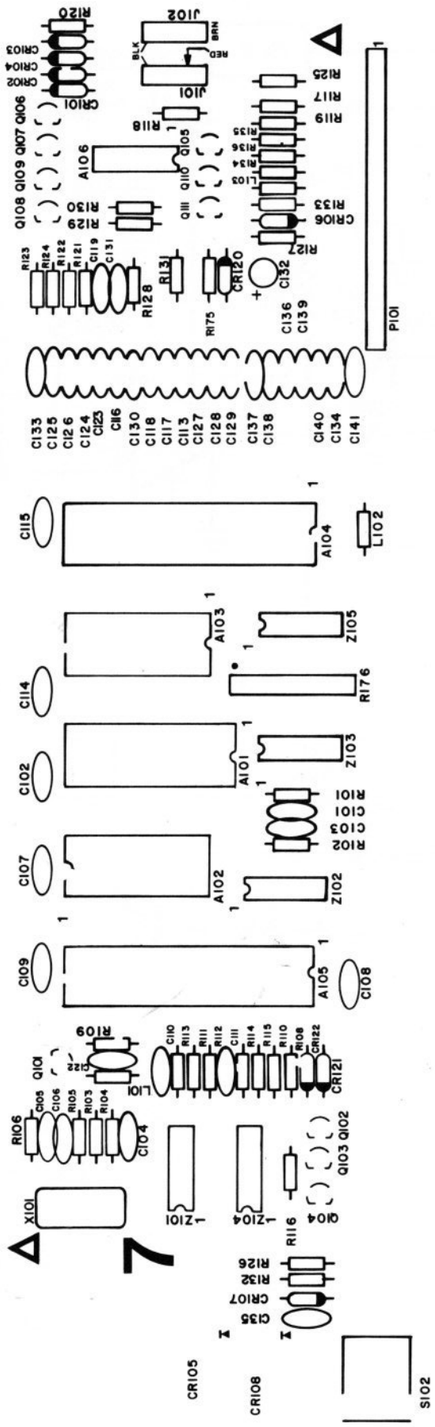

810 Side Board Silkscreen

Figure 8B-5

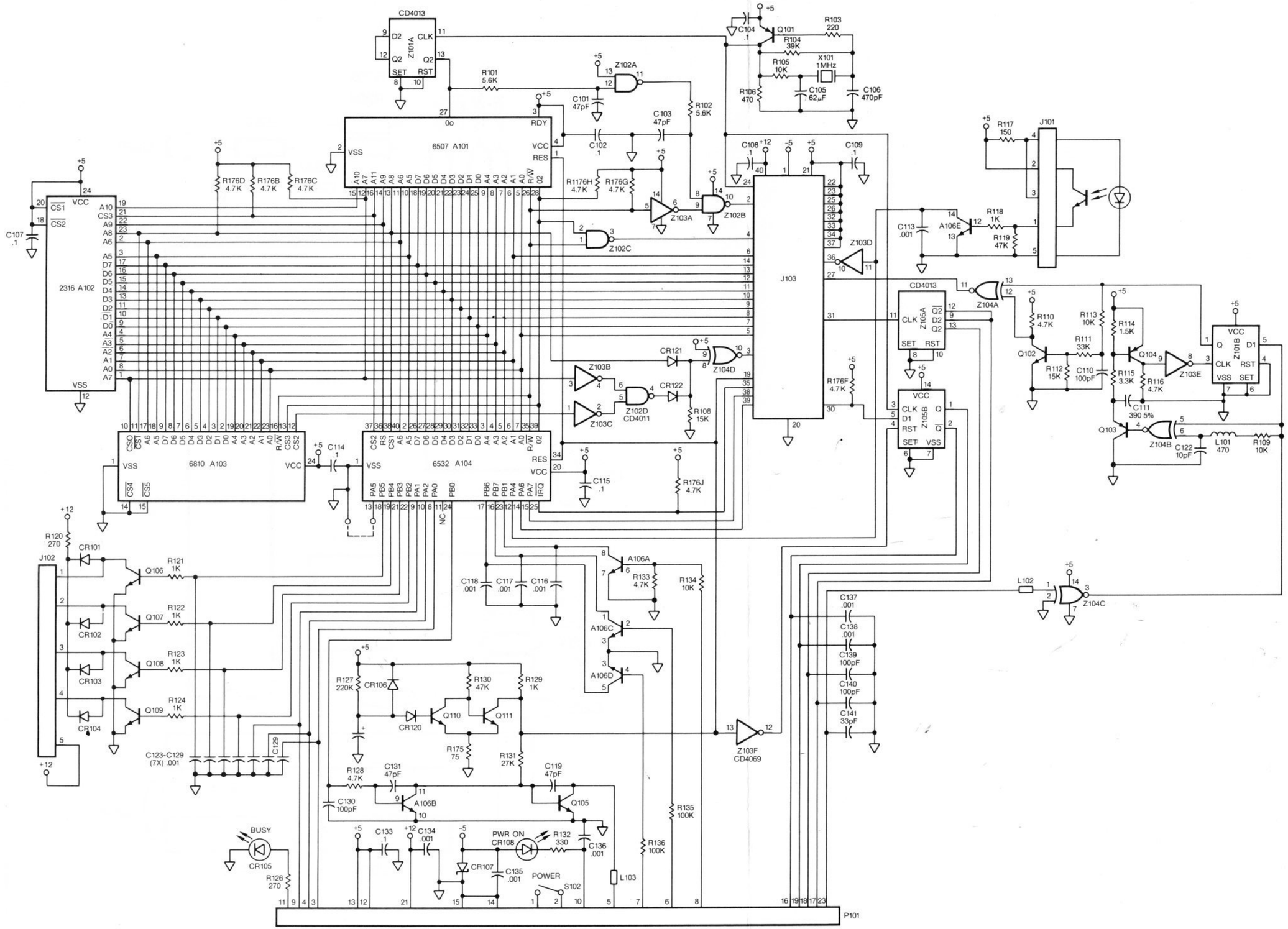

810 Side Board Schematic

Figure 8B-6

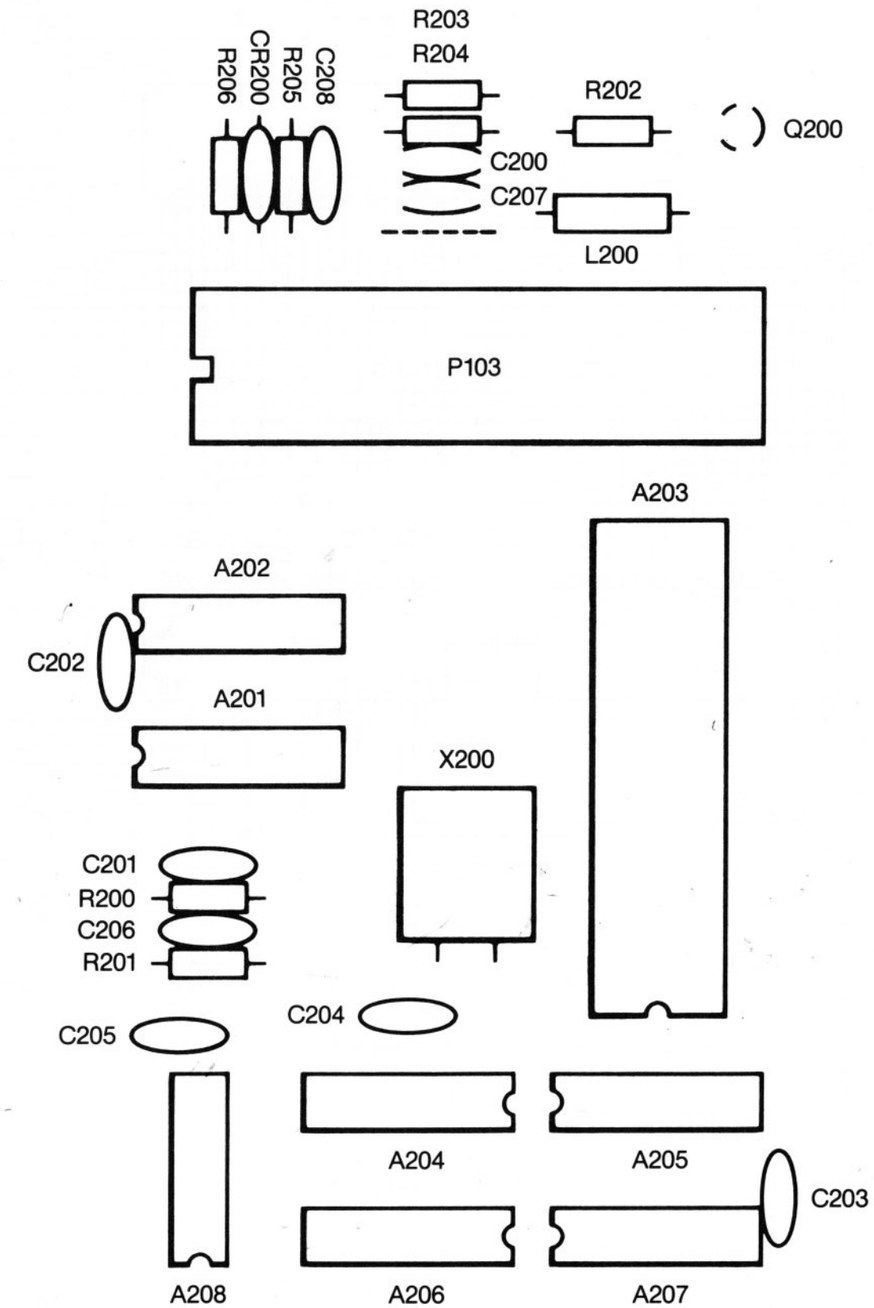

810 External Data Separator Silkscreen

Figure 8B-7

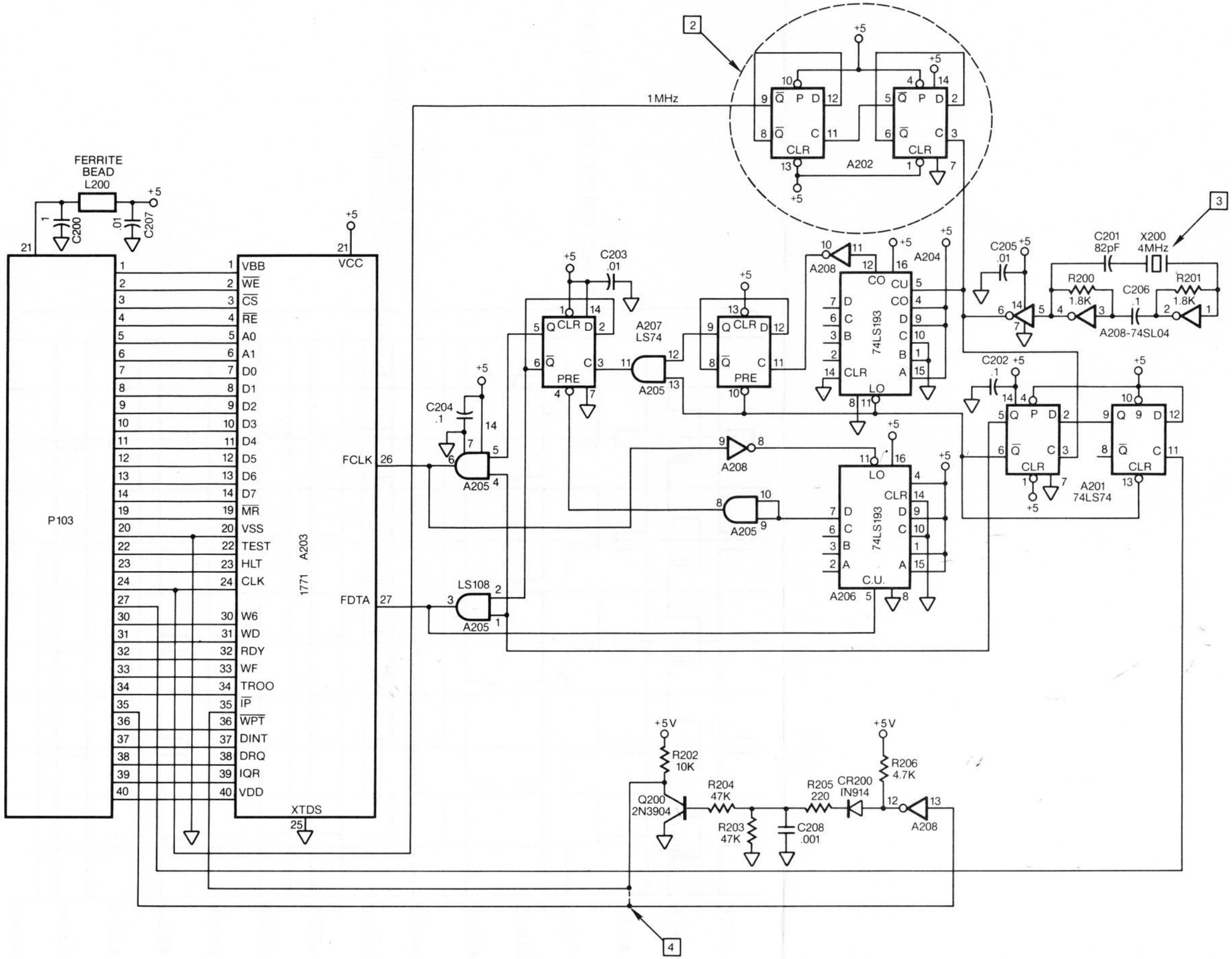

NOTES:

1. UNLESS OTHERWISE SPECIFIED
   A) ALL CAPS ARE IN μF.
   B) ALL RESISTORS ARE IN OHMS.
2. USED TO SUPPLY 1MHz CLOCK TO SIDEBOARDS. THIS APPLIES ONLY WHEN 1MHz OSC. NOT ASSEMBLED ON SIDE BOARD.
3. CRYSTAL = 4MHz ± 0.1%
   CIRCUIT = 4MHz ± 0.5%
4. JUMPER TO BY-PASS PULSE STRETCHER (NORMALLY NOT INSTALLED).

810 External Data Separator Schematic (A)

Figure 8B-8A

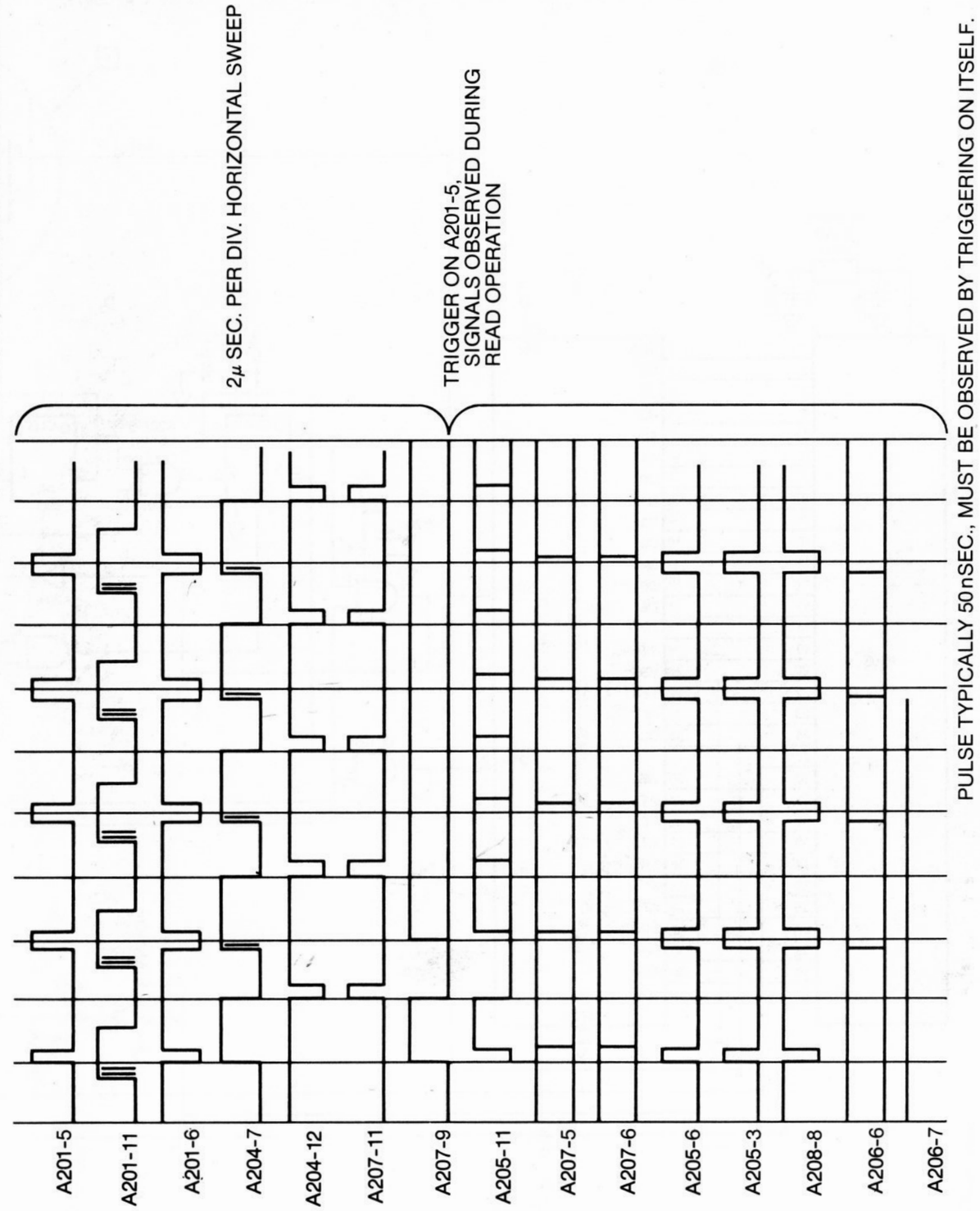

810 External Data Separator Schematic (B)

Figure 8B-8B

DIAGNOSTIC FLOWCHARTS

The Diagnostic Flowchart is intended to be easy to use and the primary aid when troubleshooting the 810 Analog Disk Drive. Follow the prompts in the order presented. When a question is asked, follow the line from the box that best applies to your unit's condition. When that line terminates with a letter inside a circle, note that a page number is near it (i.e., pg. 8B-12). Turn to that page within this appendix, locate the letter in another circle, and continue the diagnosis. The flowchart leaves nothing to chance, it tells you when to perform a specific test and when to replace components. Section 3, 810 Disk Drive Field Service Manual contains detailed instructions for each of the tests referenced in this section.

SWAP OUT PROCEDURE

At many places in the diagnostic flowchart, a box tells you to "swap out" a component, a chip, or a number of chips in a particular order. The "swap-out" instruction means that you should replace the indicated components (one at a time) with a known-good component of the same type. The 810 unit should then be tested with the new, known-good component in place to see whether the swap out solved the problem being checked. If the swap out did not fix the problem, the known good component should be removed, and the original component reinserted. In this way, you avoid needlessly replacing good components.

REPLACE IN ORDER

The "replace in order" instruction means that you should replace the components indicated in the order listed until the result called out in the previous block is obtained.

N - Some lines terminate with an N inside a circle. When this occurs, call your Atari Repair Hotline.

Inside California
(800) 672-1466

Outside California
(800) 538-1535
(800) 538-1536

Initial Power-Up Sequence

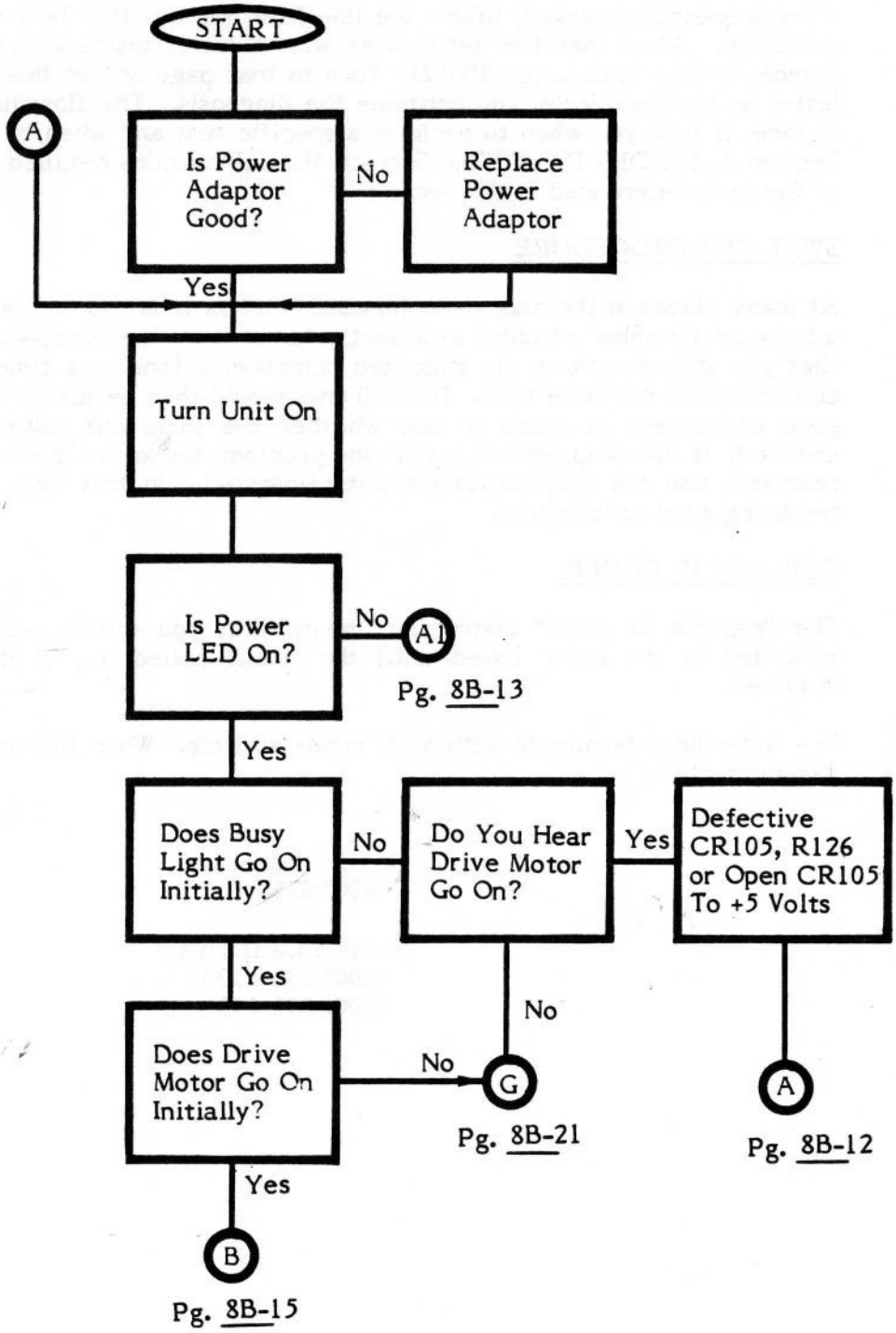

Initial Power-Up Sequence (cont)

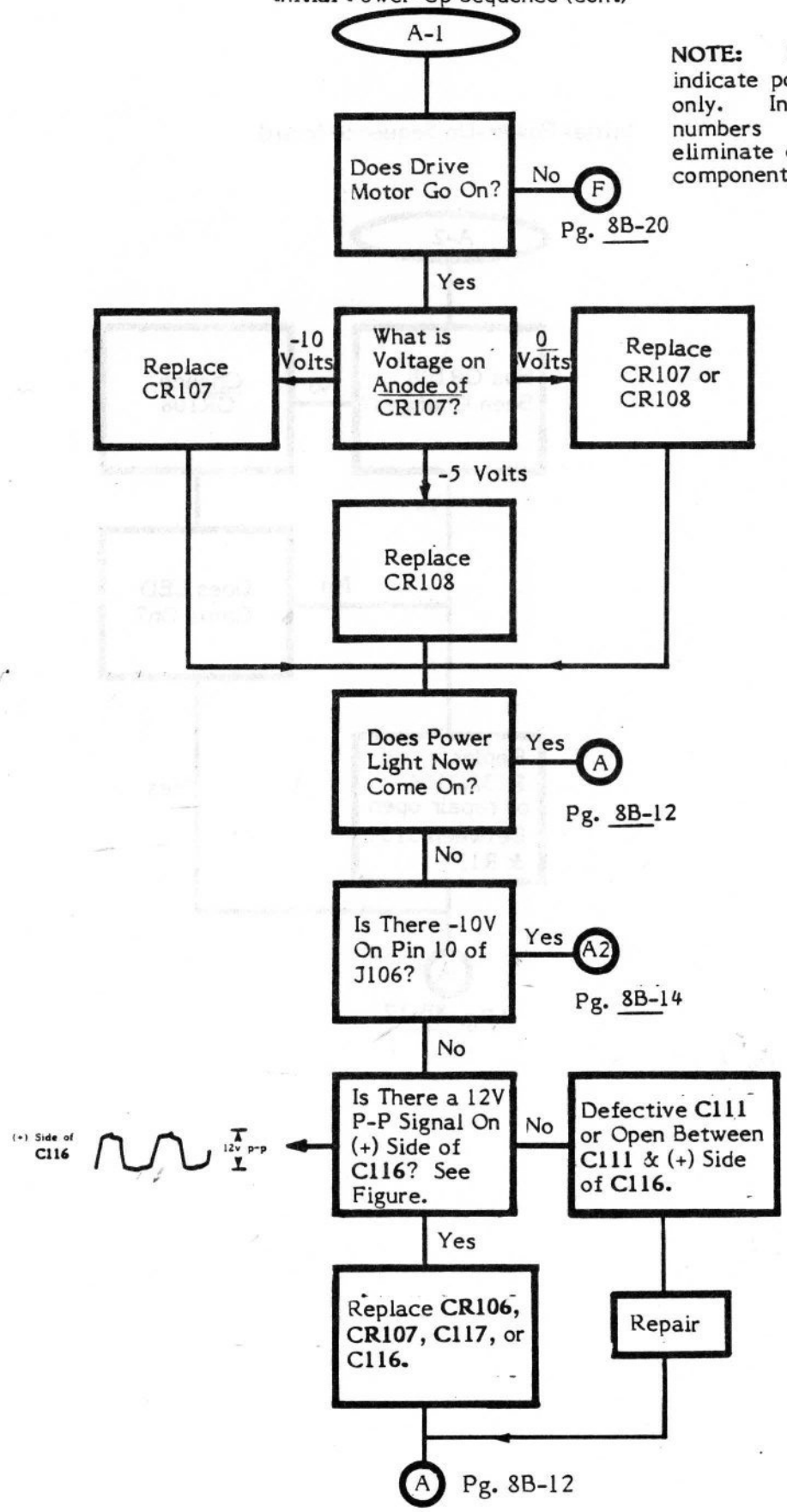

NOTE: Numbers in **bold type** indicate power supply components only. In later revisions these numbers will be changed to eliminate confusion with sideboard component numbers.

Initial Power-Up Sequence (cont)

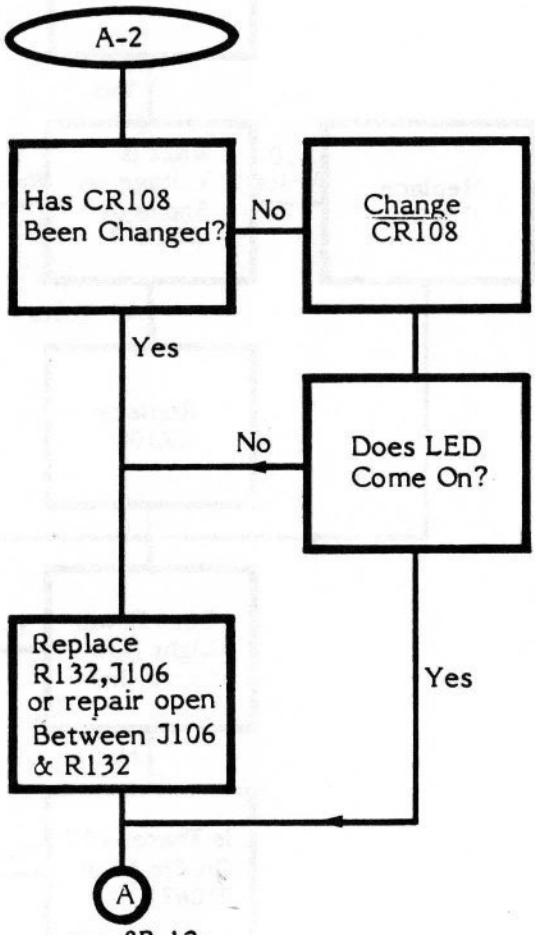

Pg. 8B-12

Initial Power-Up Sequence (cont)

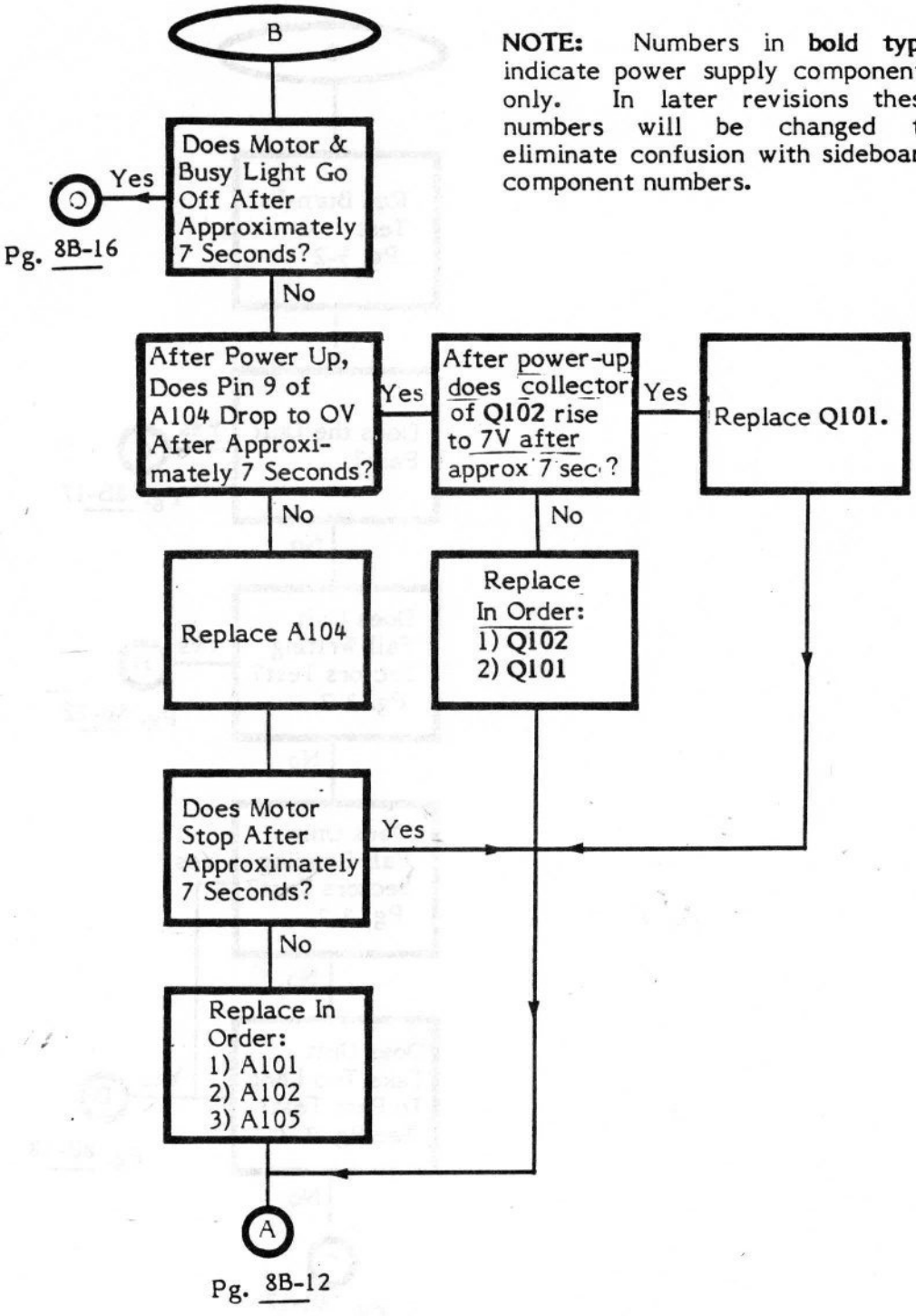

NOTE: Numbers in **bold type** indicate power supply components only. In later revisions these numbers will be changed to eliminate confusion with sideboard component numbers.

Burn-In Test

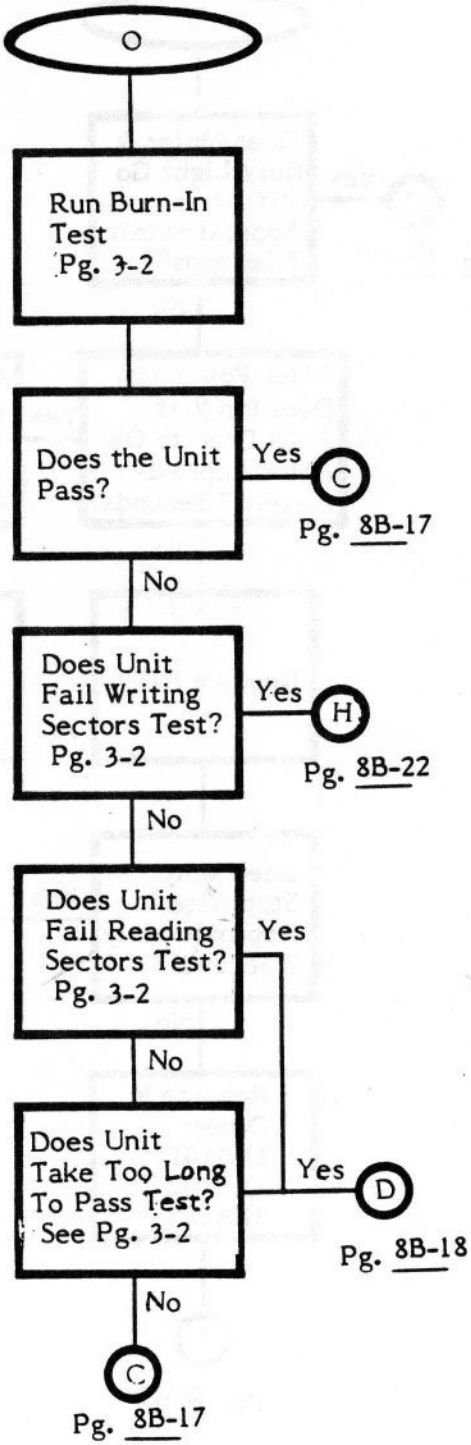
O
Run Burn-In Test Pg. 3-2
Does the Unit Pass?
Yes
C
Pg. 8B-17
No
Does Unit Fail Writing Sectors Test? Pg. 3-2
Yes
H
Pg. 8B-22
No
Does Unit Fail Reading Sectors Test? Pg. 3-2
Yes
No
Does Unit Take Too Long To Pass Test? See Pg. 3-2
Yes
D
Pg. 8B-18
No
C
Pg. 8B-17

DOS Verification Test

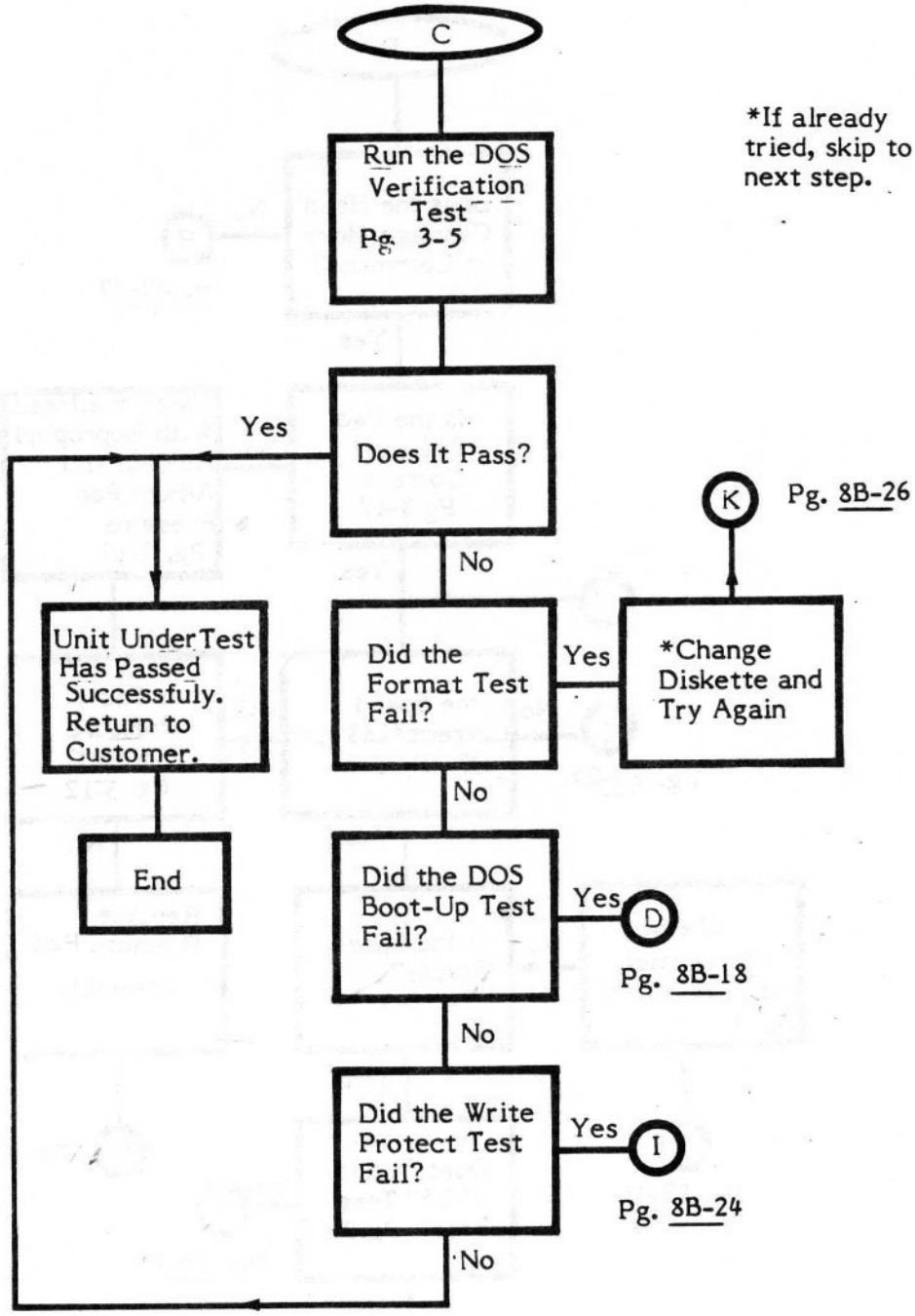

Alignment Program

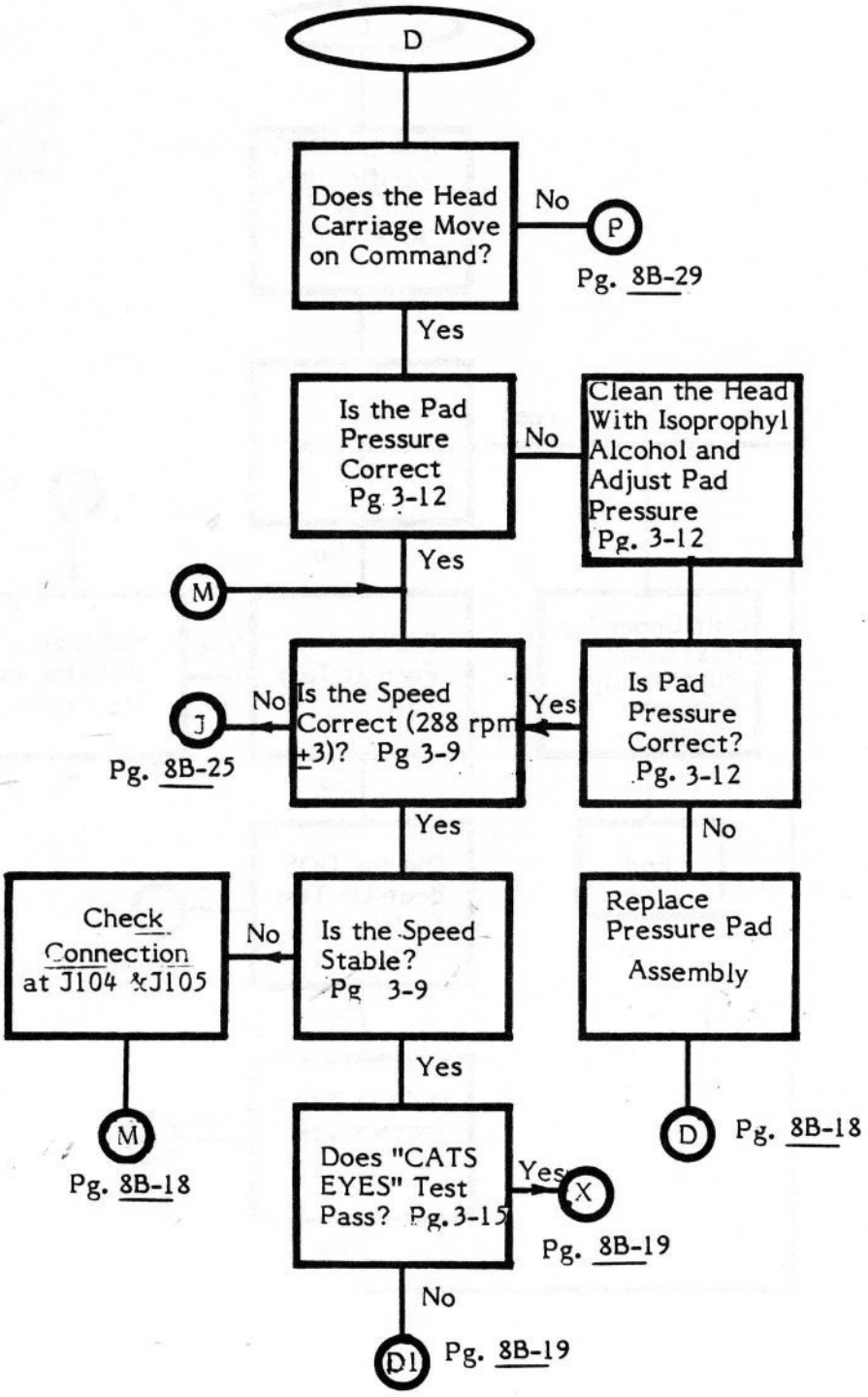

Alignment Program (cont)

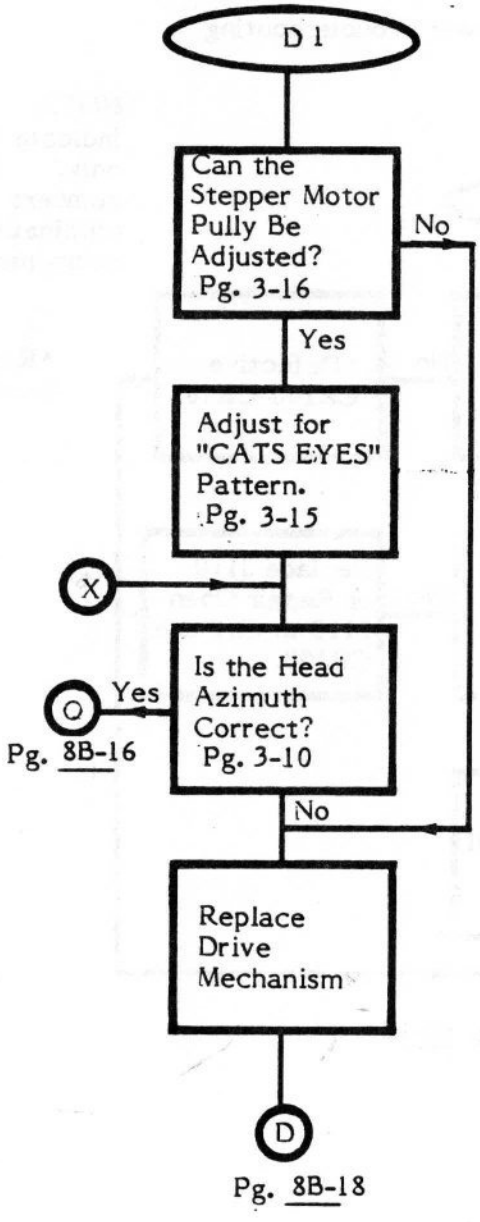

No Power Troubleshooting

NOTE: Numbers in **bold type** indicate power supply components only. In later revisions these numbers will be changed to eliminate confusion with sideboard component numbers.

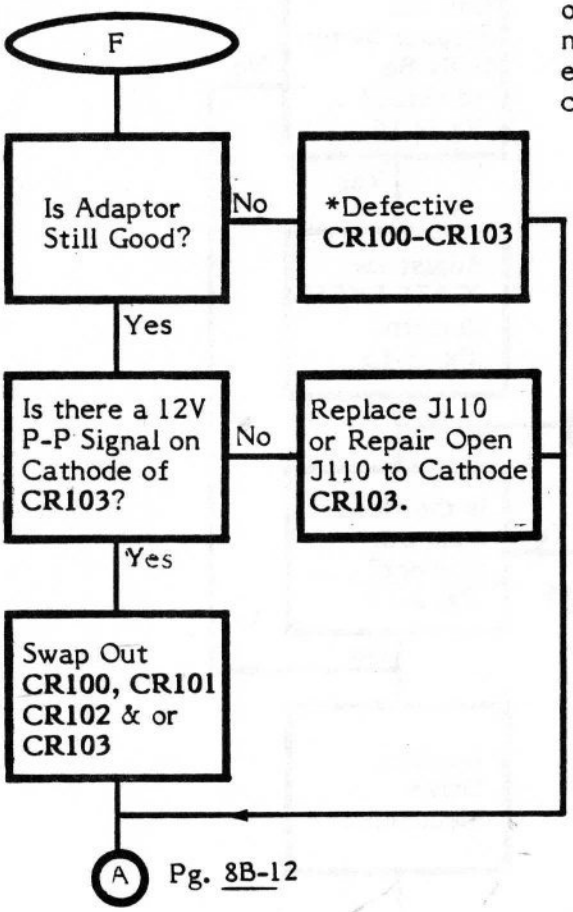

*Replace these components before plugging in another adaptor.

Drive Motor Troubleshooting

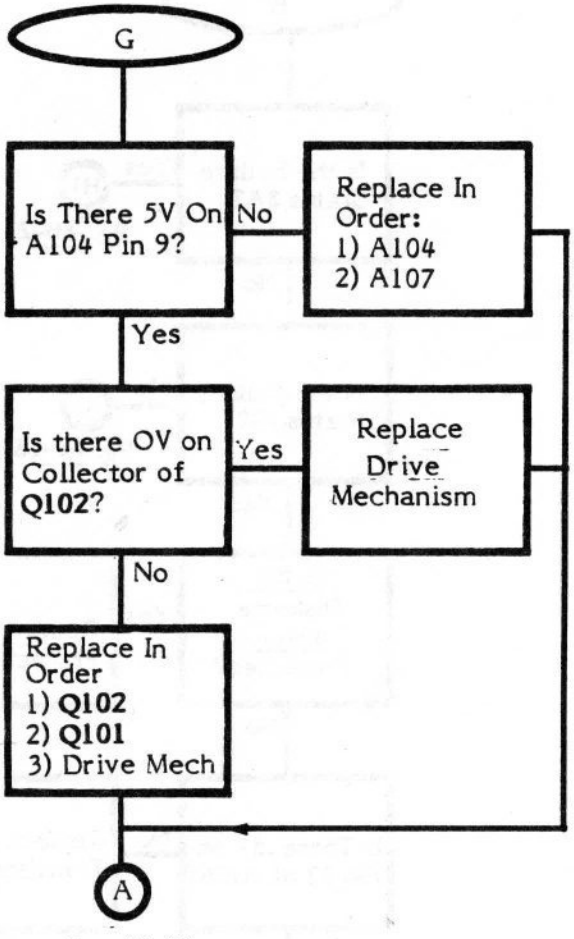

Pg. 8B-12

NOTE: Numbers in **bold type** indicate power supply components only. In later revisions these numbers will be changed to eliminate confusion with sideboard component numbers.

Write Logic Troubleshooting

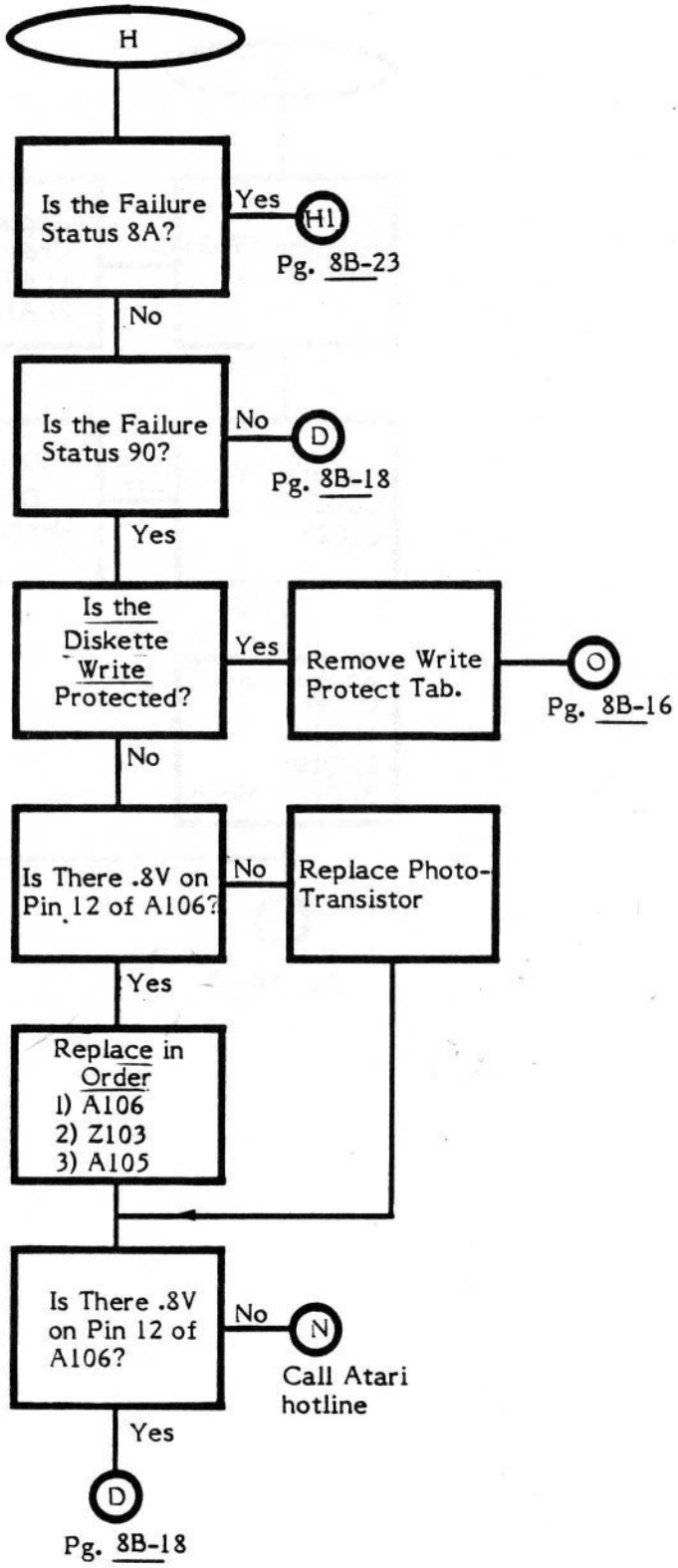

Write Logic Troubleshooting - Part II

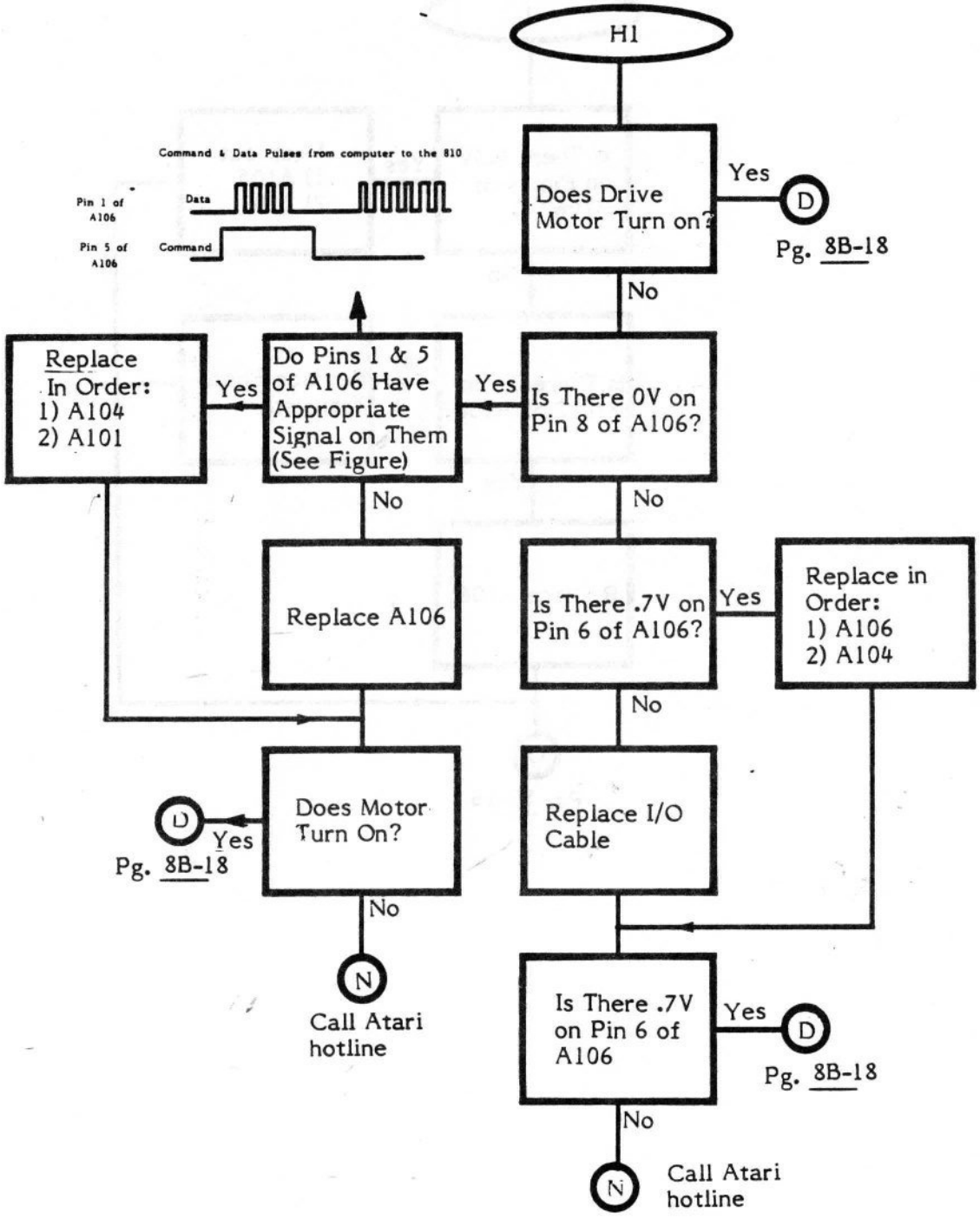

Write Protect Troubleshooting

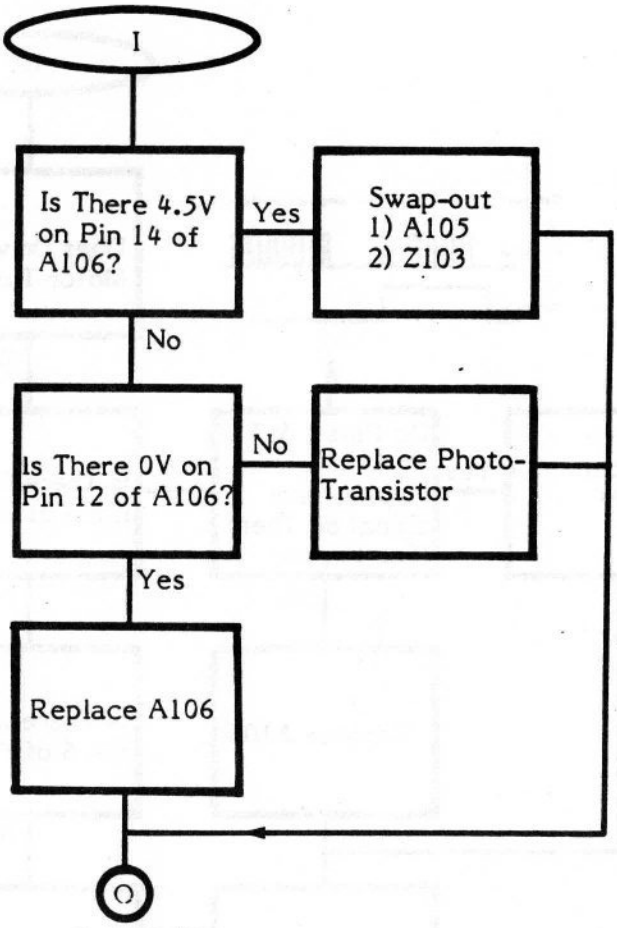

Pg. 8B-16

Speed Troubleshooting

NOTE: Numbers in **bold type** indicate power supply components only. In later revisions these numbers will be changed to eliminate confusion with sideboard component numbers.

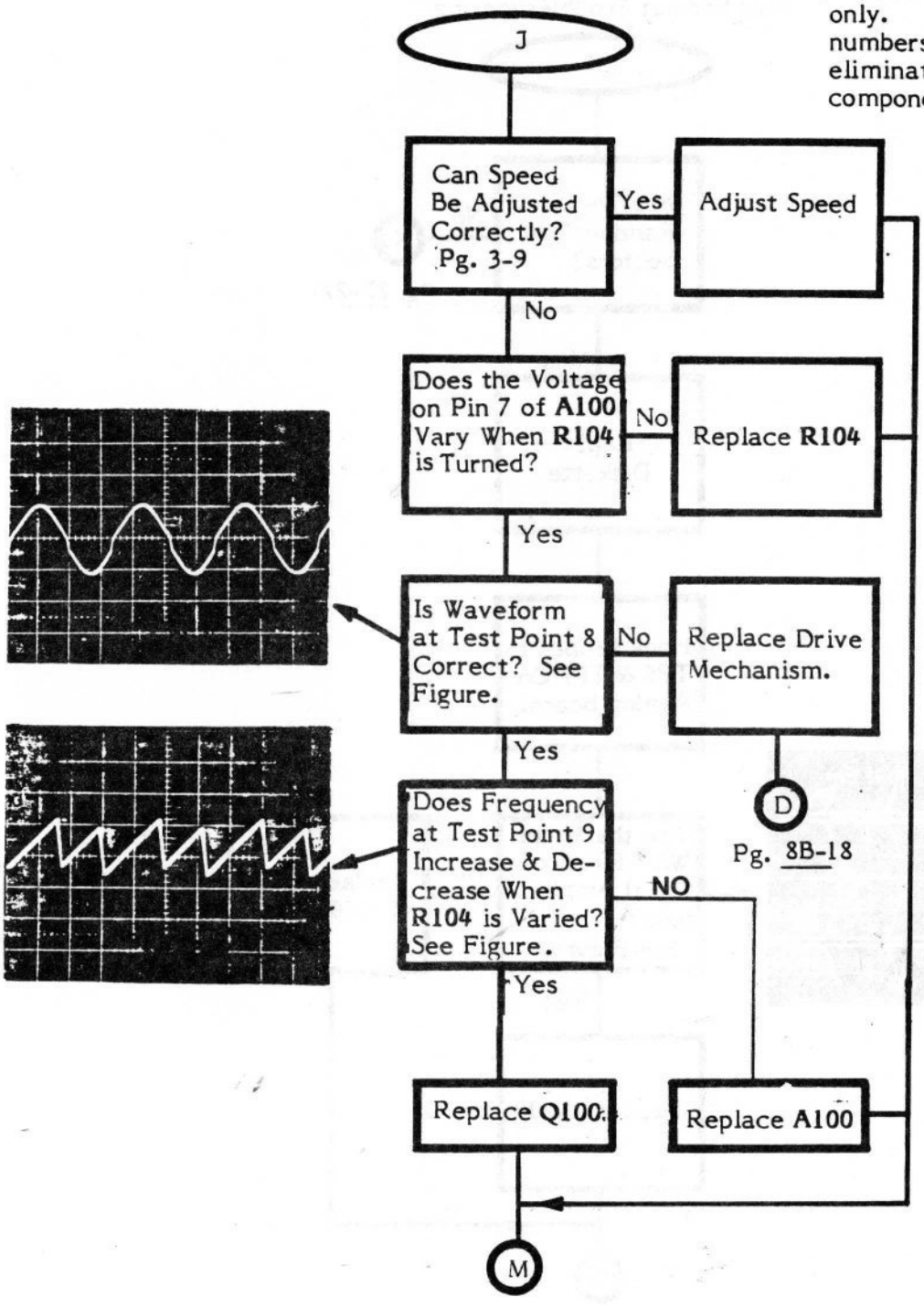

Pg. 8B-18

Fail Format Troubleshooting

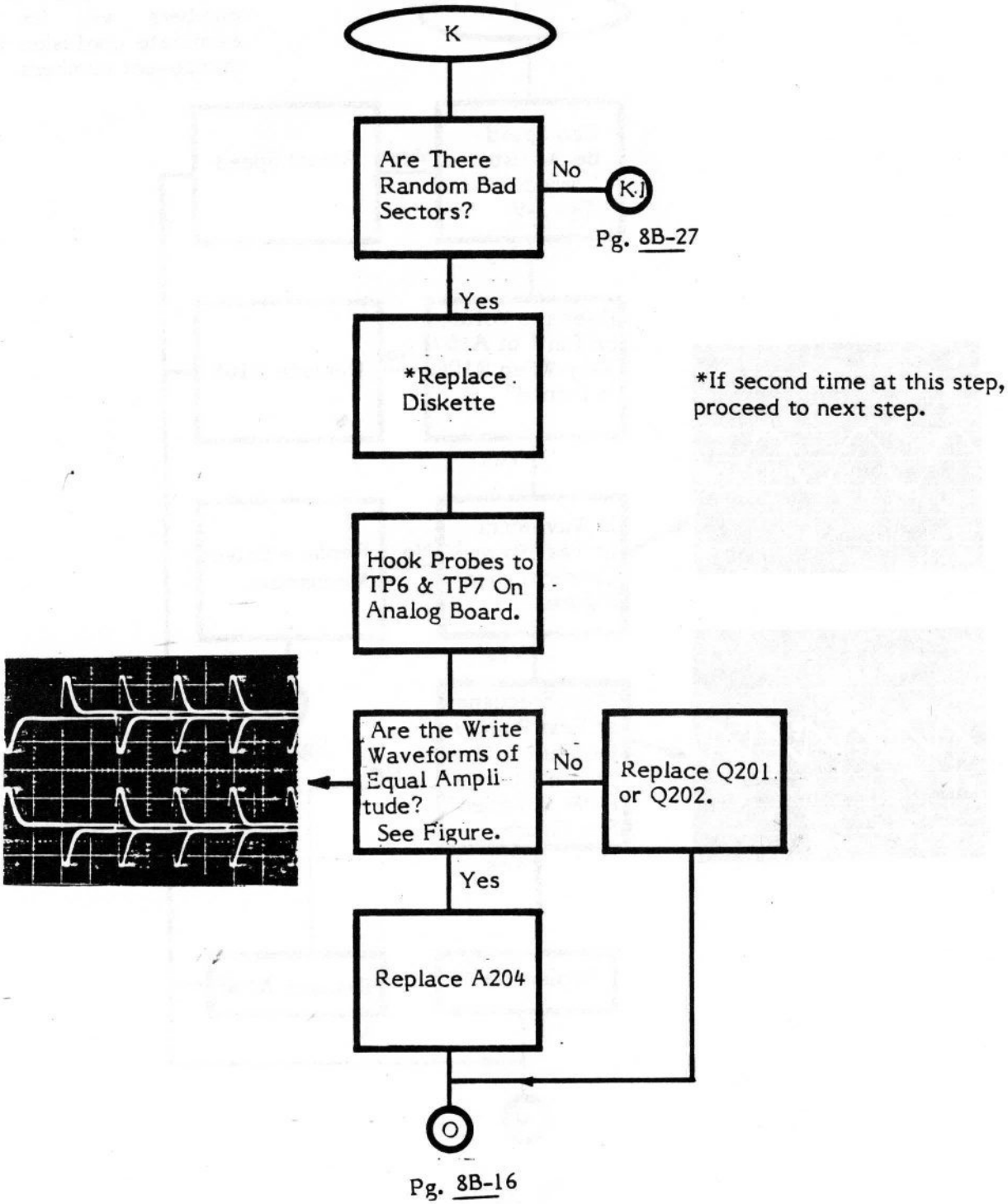

Fail Format Troubleshooting (cont)

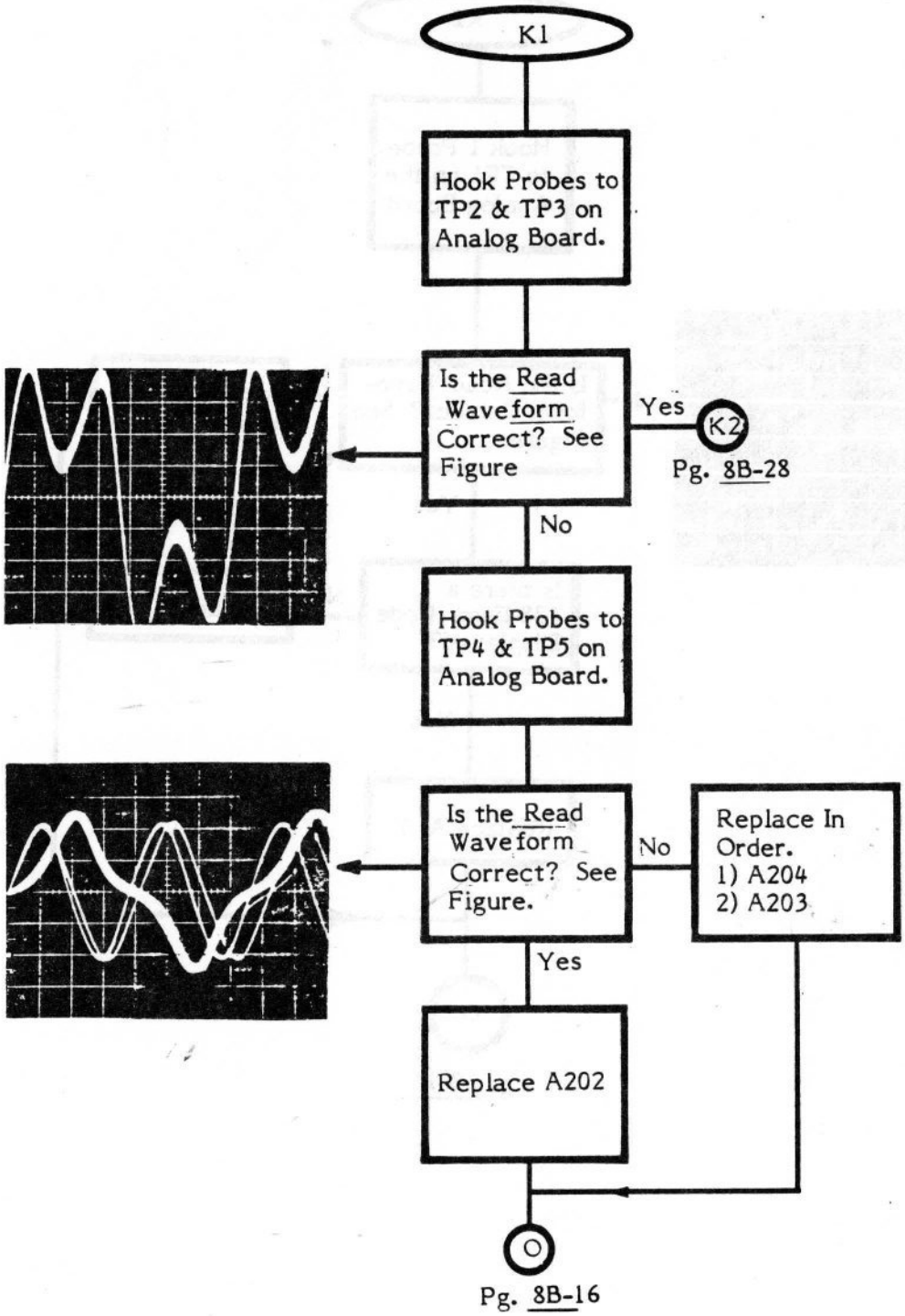

Fail Format Troubleshooting (cont)

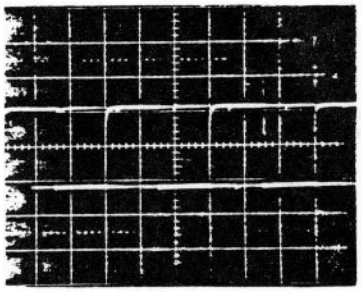

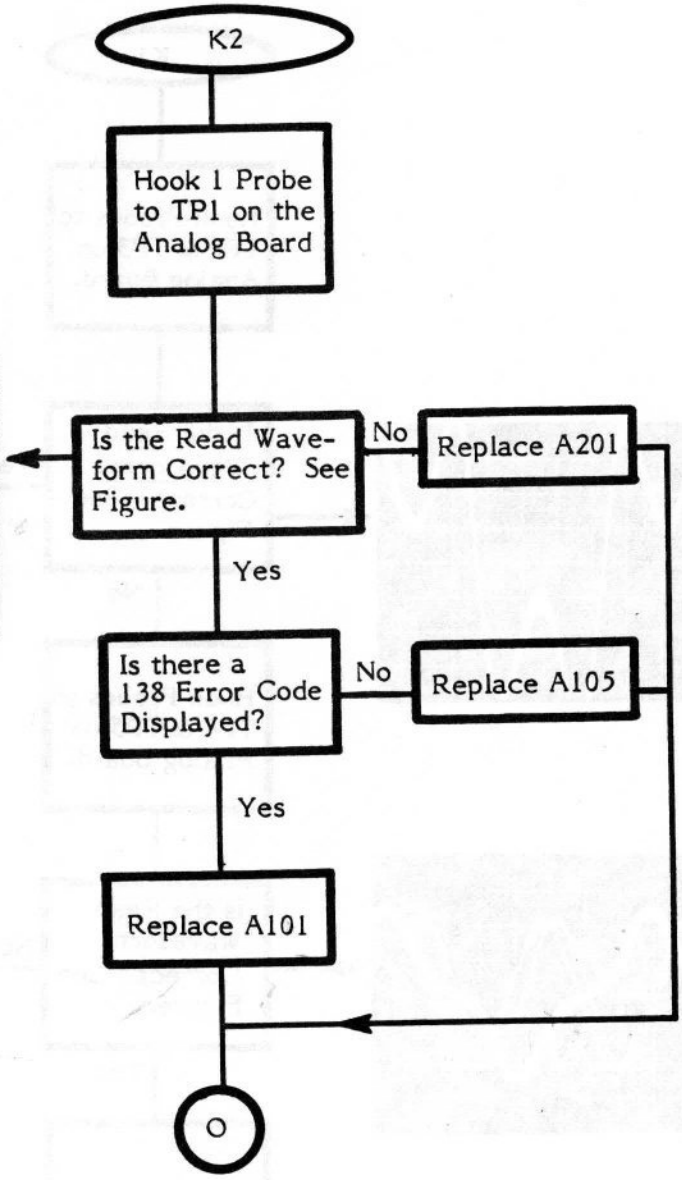

Pg. 8B-16

Stepper Motor Troubleshooting

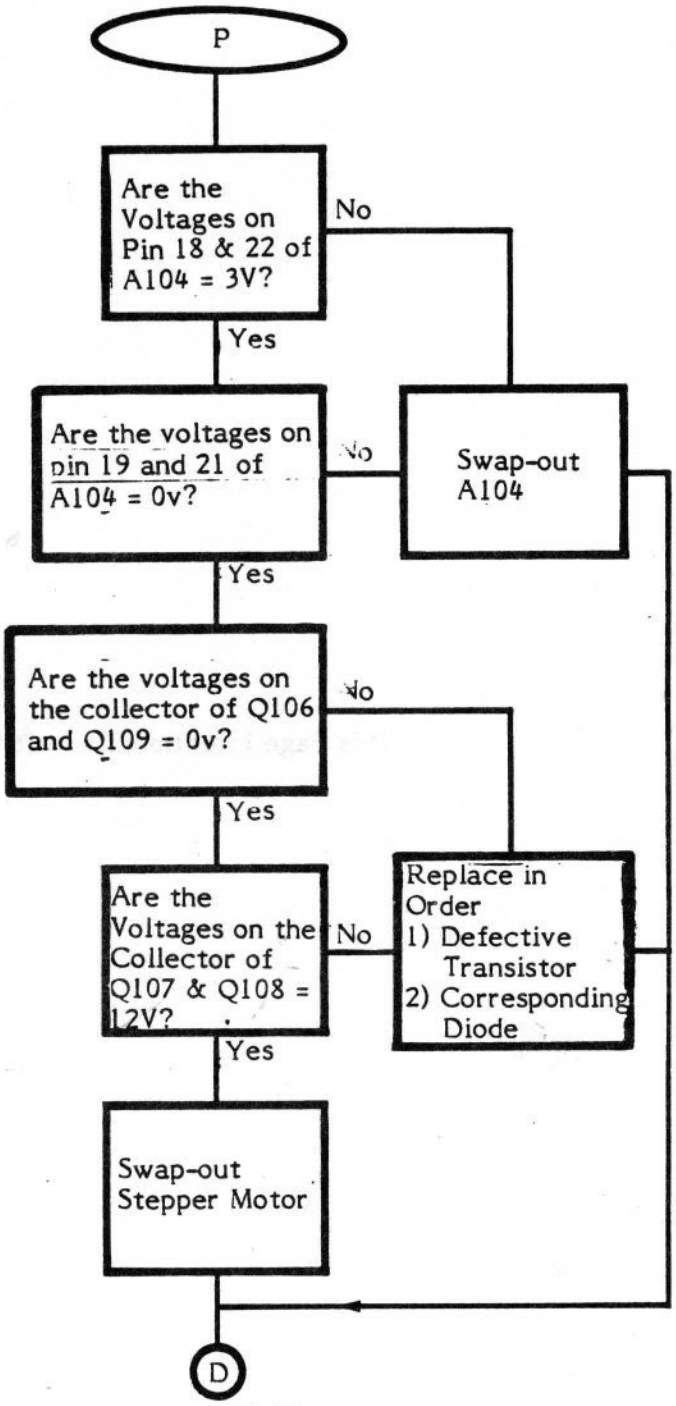

Pg. 8B-18

This Page Intentionally Left Blank

DISASSEMBLY PROCEDURE FOR THE 810 ANALOG DISK DRIVE

Note: Instructions for Disassembly/Assembly of the Disk Drive case, common baseplate/front panel and side PCB are in Atari 810 Disk Drive Field Service Manual, Section 6, pg. 6-3 to 6-7.

WARNING: Be sure unit is unplugged before disassembling or re-assembling to any level.

POWER SUPPLY BOARD REMOVAL

Use Figure 8B-9 as reference for the following seven steps.

1. Disassemble the Disk Drive case.
2. Remove the common baseplate and front panel from the Disk Drive lower cover.
3. Remove the side PCB from the common baseplate.
4. Remove the four screws securing the rear Power Supply board to the common baseplate.
5. Remove the two screws holding the 5 Volt Regulator and 12 Volt Regulator to the common baseplate.
6. Disconnect the two wiring harnesses plugged into the Power Supply board (J102 & J103). Be sure to note the polarity and location for Reassembly (See Detail in Figure 8B-9).
7. Lift the board straight up and away from the baseplate and place it on a suitable work surface.

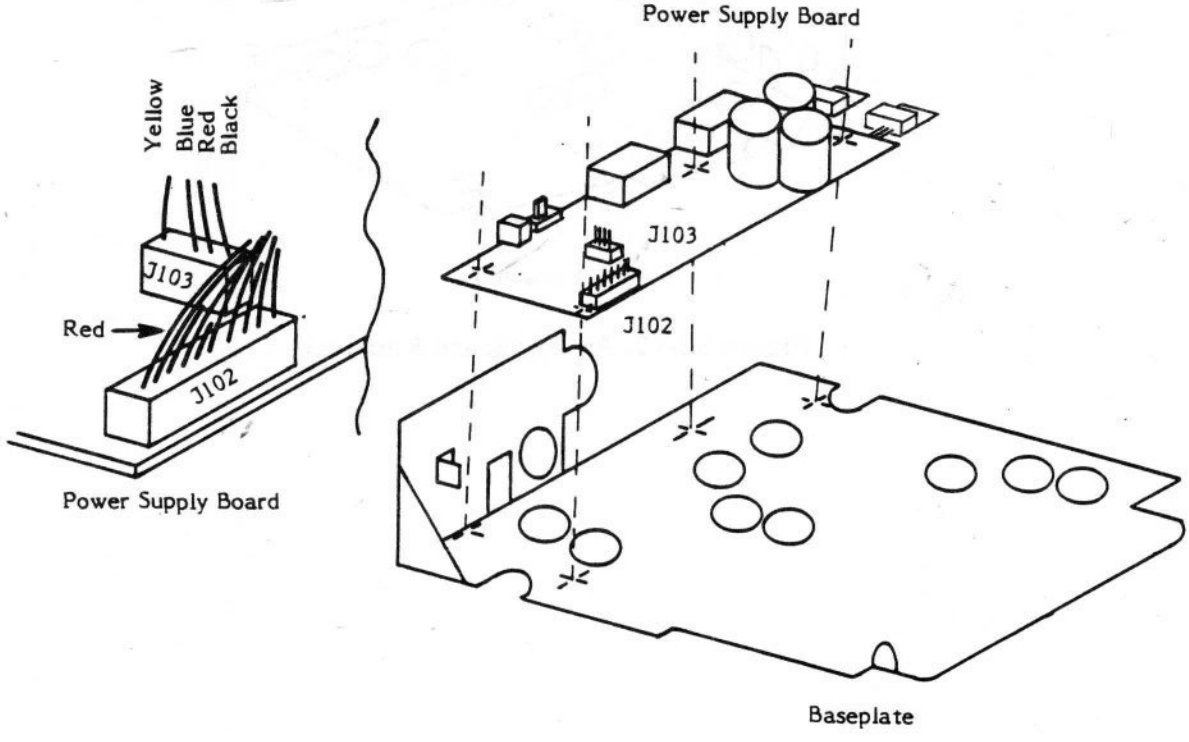

Figure 8B-9. Power Supply Board Removal

DISASSEMBLY PROCEDURE FOR THE 810 ANALOG DISK DRIVE

ANALOG BOARD REMOVAL

Use Figure 8B-10 as reference for the following four steps.

1. Disassemble the Disk Drive case.
2. Unplug the two wiring harnesses from the Analog Board (J201 & J209). Be sure to note the polarity for Reassembly (See Detail in Figure 8B-10).
3. Remove the two screws holding the Analog Board to the Drive Mechanism.
4. Lift the board straight up and place it on a suitable work surface.

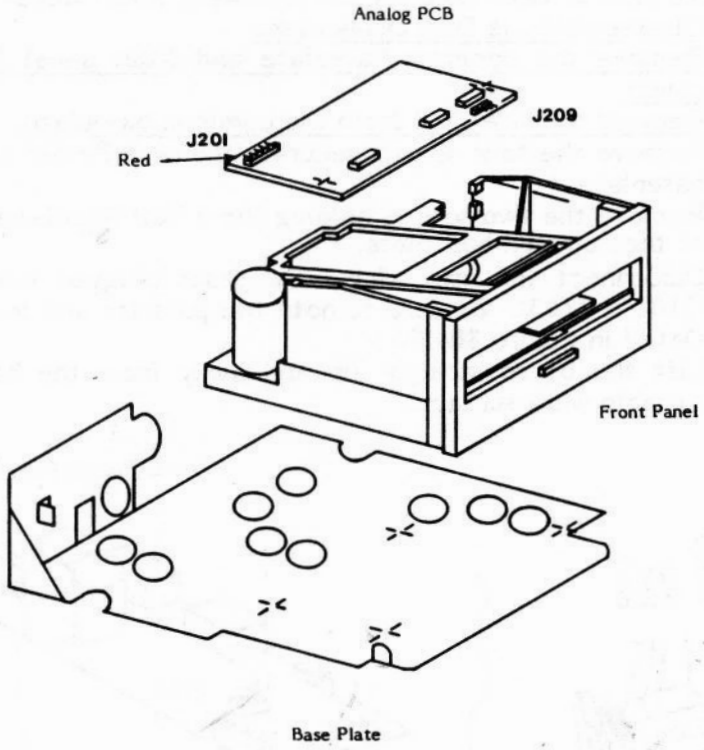

Figure 8B-10. Analog Board Removal

DISASSEMBLY PROCEDURE FOR THE 810 ANALOG **DISK DRIVE**

DRIVE MECHANISM REMOVAL

Use Figure 8B-11 as reference for the following seven steps.

1. Disassemble the Disk Drive case.
2. Remove the common baseplate and front panel from the Disk Drive lower cover.
3. Remove the Analog PCB from the top of the Drive Mechanism.
4. Unplug the two wiring harnesses on the Power Supply Board (J102 and J103). Be sure to note the location and polarity for reassembly (See Detail in Figure 8B-11).
5. Place the Drive Mechanism and common baseplate assembly upside down on the work surface, exposing the four screws holding the Drive Mechanism to the baseplate.
6. Remove the four screws that secure the Drive Mechanism to the baseplate.
7. Lift the baseplate straight off the Drive Mechanism.

This concludes the Disassembly procedures for the 810 Analog Disk Drive.

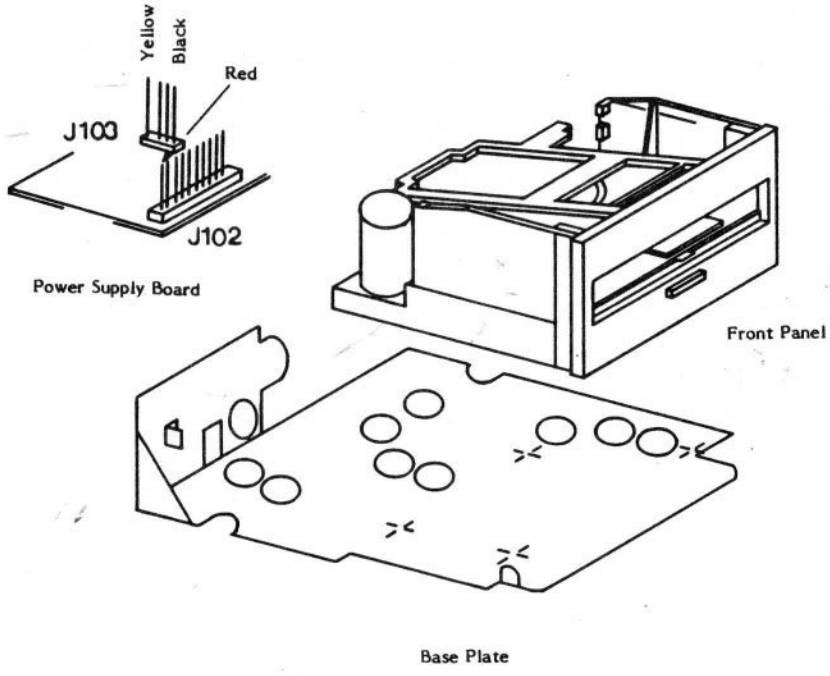

Figure 8B-11. Drive Mechanism Removal.

ASSEMBLY PROCEDURE FOR THE 810 ANALOG DISK DRIVE

DRIVE MECHANISM ASSEMBLY

Use Figure 8B-11 as reference for the following six steps.

1. Carefully set the Drive Mechanism upside down on a clean, flat surface with the drive door facing you. NOTE: Be sure the Analog Board is not attached to the Drive Mechanism.
2. Place the common baseplate over the Drive Mechanism, aligning the four screw holes to the Drive Mechanism.
3. Center the flywheel in the large hole in the common baseplate.
4. Insert and tighten the four screws holding the common baseplate to the Drive Mechanism.
5. Turn the assembly right side up to connect the wiring harnesses.
6. Connect the two wiring harnesses on the Power Supply Board (J102 and J103). Be sure the location and polarity are the same as before disassembly (See Detail in Figure 8B-11).

ANALOG BOARD ASSEMBLY

Use Figure 8B-10 as reference for the following three steps.

1. Align the two screw holes on the Analog Board to the Drive Mechanism.

2. Insert and tighten the two screws.

3. Connect the two wiring harnesses (J201 and J209) from the Analog Board. Be sure the polarity is the same as before desassembly (See Detail in Figure 8B-10).

POWER SUPPLY BOARD ASSEMBLY

Use Figure 8B-9 as reference for the following four steps.

1. Align the six screw holes on the Power Supply Board to the common baseplate.

2. Insert and tighten the two screws holding the 5Volt Regulator and 12 Volt Regulator to the common baseplate.

3. Insert and tighten the four screws holding the Power Supply Board to the common baseplate.

4. Connect the two wiring harnesses (J102 and J103) to the Power Supply Board. Be sure the location and polarity is the same as before disassembly (See Detail in Figure 8B-9).

This concludes the Assembly procedure for the 810 Analog Disk Drive.

This Page Intentionally Left Blank

ATARI 810M ANALOG DISK DRIVE (MPI)
PARTS LIST

Assy	Part No.	Description	Location
	CA014122	I/O Cable Assy	
	CA017964	AC Adaptor (Pkgd)	
	C017945	AC Power Adaptor (Same As CA017964-Unpkgd)	
Ana P/S	14-5102	Resistor ¼W 1K	R103,105,110,111
Ana P/S	14-5105	Resistor ¼W 1 Meg	R101,107
Ana P/S	14-5154	Resistor ¼W 150K	R108
Ana P/S	14-5222	Resistor ¼W 2.2K	R112,113
Ana P/S	14-5223	Resistor ¼W 22K	R102,114
Ana P/S	14-5471	Resistor ¼W 470 Ohm	R106,109
Ana P/S	15-51R0	Resistor ½W 1 Ohm	R100
Ana P/S	31-1N4001	Diode 1N4001	CR104,105
Ana P/S	34-2N3904	Transistor 2N3904	Q101,102
Ana P/S	C012995	Connector Rt Angle (13 pin)	J107,108
Ana P/S	C014180-11	Cap. Ceramic Axial .022uF (50V)	C106
Ana P/S	C014180-16	Cap. Ceramic Axial .1uF (50V)	C105
Ana P/S	C014181-02	Cap. Ceramic Axial .01uF (25V)	C102,114
Ana P/S	C014181-03	Cap. Ceramic Axial .1uF (25V)	C108,111,115
Ana P/S	C014181-05	Cap. Ceramic Axial .22 uF (25V)	C109
Ana P/S	C014348	Voltage Regulator 7805 (5V)	J104
Ana P/S	C014350	Transistor	Q112
Ana P/S	C014368	Cap. Elec Radial 470 uF (16V)	C116,117
Ana P/S	C014384	Inductor Ferrite Bead	L101
Ana P/S	C014386-01	Socket IC (8 pin)	XA100
Ana P/S	C014392	Cap. Elec Radial 10 uF (16V)	C107
Ana P/S	C014398	Diode MR501	CR100-103
Ana P/S	C014712	Voltage Regulator 7812 (12V)	
Ana P/S	C014715	Power Jack	J110
Ana P/S	C014719-02	Connector (5 pin)	J103
Ana P/S	C014719-03	Connector (23 pin)	J106
Ana P/S	C014719-10	Connector (10 pin)	J102
Ana P/S	C014725	Switch Logic	S101
Ana P/S	C014780-02	Cap. Elec Radial 4700 uF (25V)	C110,112
Ana P/S	C014796	Fastener Latching	Alternate for C015344
Ana P/S	C014798	Heatsink	Part of Q100
Ana P/S	C015344	Rivet Nylon	
Ana P/S	C015505	Cap. Elec Radial 47 uF (16V)	C100,101
Ana P/S	C016028	Test Points	TP1-9
Ana P/S	C016364	Diode Schottky (1N5818)	CR106,107
Ana P/S	C016569	Cap. Tantalum Axial 1 uF (20V)	C103
Ana P/S	C017101	IC LM2917-8	A100
Ana P/S	C017949-01	Resistor Variable 1K	R104
Ana P/S	C017952	Inductor 3.3 uH	L102
Ana P/S	C017954	Cap. Polyester Axial .01 uF (25V)	C104
Ana P/S	C017957	Cap. Elec Radial 4700 uF (35V)	C113
Ana P/S	CA016530	Transistor Assy	Q100
Ana P/S	CA017937	PC Board Analog Power Supply	

ATARI 810M ANALOG DISK DRIVE (MPI)
PARTS LIST

Assy	Part No.	Description	Location
Analog	14-5100	Resistor ¼W 10 Ohm	R200
Analog	14-5102	Resistor ¼W 1K	R202
Analog	14-5103	Resistor ¼W 10K	R204,205
Analog	14-5123	Resistor ¼W 12K	R223
Analog	14-5202	Resistor ¼W 2K	R201,
Analog	14-5220	Resistor ¼W 22 Ohm	R226
Analog	14-5224	Resistor ¼W 220K	R213
Analog	14-5302	Resistor ¼W 3K	R212,220
Analog	14-5471	Resistor ¼W 470 Ohm	R225
Analog	14-5472	Resistor ¼W 4.7K	R214,216
Analog	14-5512	Resistor ¼W 5.1K	R224
Analog	14-5622	Resistor ¼W 6.2K	R215,217
Analog	14-5680	Resistor ¼W 68 Ohm	R211
Analog	14-5681	Resistor ¼W 680 Ohm	R209,210
Analog	14-5750	Resistor ¼W 75 Ohm	R206
Analog	14-5821	Resistor ¼W 820 Ohm	R207,208
Analog	14-2142	Resistor ¼W 1.4K ± 2%	R218
Analog	15-5360	Resistor ½W 36 Ohm	R227
Analog	31-1N914	Diode 1N914	CR202,204,205 (Alternate for P/N C060607)
Analog	C018991	Transistor 2N3906	Q201-205
Analog	C014179-08	Cap. Ceramic Axial 82pF (50V)	C215
Analog	C014180-13	Cap. Ceramic Axial 330pF (50V)	C209
Analog	C014180-14	Cap. Ceramic Axial 680pF (50V)	C210
Analog	C014180-15	Cap. Ceramic Axial .001uF (50V)	C207
Analog	C014180-16	Cap. Ceramic Axial .1uF (50V)	C211,212,217
Analog	C014181-02	Cap. Ceramic Axial .01uF (25V)	C203,204
Analog	C014181-03	Cap. Ceramic Axial .1uF (25V)	C206,208,213, 214,216
Analog	C014181-07	Cap. Elec Radial .47uF (25V)	C202,205
Analog	C014332	IC LM311	A201
Analog	C014386-01	Socket IC (8 pin)	XA201
Analog	C014386-02	Socket IC (14 pin)	XA202,203
Analog	C014386-03	Socket IC (16 pin)	XA204
Analog	C014392	Cap. Elec Radial 10uF (16V)	C200,201
Analog	C014721-03	Connector Rt Angle (5 pin)	J209
Analog	C014721-04	Connector Rt Angle (10 Pin)	J201
Analog	C014808-06	Diode Zener 1N5235B (6.8V)	CR203
Analog	C016028	Test Points	TP1-12
Analog	C016364	Diode Schottky 1N5818	CR201
Analog	C017948-01	Inductor 150uH (7 Ohm)	L201,202
Analog	C017948-02	Inductor 680uH (30 Ohm)	L203,204
Analog	C017950	IC CMOS Analog Multi-plexer (4052)	A204
Analog	C017951	IC NE592	A202,203
Analog	C017956	Voltage Regulator 79L05	VR201
Analog	C060607	Diode (1N4148)	CR202,204,205 (Alternate listed)
Analog	CA017936	PC Board Analog	

ATARI 810M ANALOG DISK DRIVE (MPI)
PARTS LIST

Assy	Part No.	Description	Location
Analog	CA017947	Interconnect Cable (Connects Analog to Analog P/S) (Specify MPI Drive Mech.)	
Bottom	88-1004	Rubber Feet	(Alternate for P/N C016848)
Bottom	88-1010	Mounting Pad	
Bottom	C014324	Boss Fastener	
Bottom	C016028	Post Header	
Bottom	C016848	Foot Plug	(Alternate Listed)
Bottom	CA014158	Lower Assy	
Bottom	CA014318	Fastener Base Assy	
Bottom	C012972	Common Base	
Data Sep	14-5103	Resistor ¼W 10K	R202
Data Sep	14-5182	Resistor ¼W 1.8K	R200,201
Data Sep	14-5221	Resistor ¼W 220 Ohm	R205
Data Sep	14-5472	Resistor ¼W 4.7K	R206
Data Sep	14-5473	Resistor ¼W 47K	R203,204
Data Sep	31-1N914	Diode 1N914	CR200 (Alternate for P/N C060607)
Data Sep	34-2N3904	Transistor 2N3904	Q200
Data Sep	C014179-08	Cap. Ceramic Axial 82pF (50V)	C201
Data Sep	C014181-01	Cap. Ceramic Axial .001uF (25V)	C208
Data Sep	C014181-02	Cap. Ceramic Axial .01uF (25V)	C203,205,207
Data Sep	C014181-03	Cap. Ceramic Axial .1uF (25V)	C200,202,204,206
Data Sep	C014329	IC FDC 1771	A203
Data Sep	C014384	Inductor Ferrite Bead	L200
Data Sep	C014386-02	Socket IC (14 pin)	XA201,205,207,208
Data Sep	C014386-03	Socket IC (16 pin)	XA204,206
Data Sep	C014386-09	Socket IC (40 pin)	XA203
Data Sep	C016018	Crystal 4.000000 Mhz	X200
Data Sep	C016045	IC 74LS74	A201,207
Data Sep	C017096	IC 74LS04	A208
Data Sep	C017097	IC 74LS08	A205
Data Sep	C017100	IC 74LS193	A204,206
Data Sep	C017511	Shield Insulator Pad	
Data Sep	C017521	DIP Header (40 pin post)	P103
Data Sep	C060607	Diode (1N4148)	CR200 (Alternate listed)
Data Sep	CA017231	PC Board Data Separator	
Disk Dr	CA014072	Disk Drive Assy MPI	
Final	CA014139-01	Atari HCD 810 Disk Dive	(With MPI Drive)
Final	CA014156-02	Atari HCD 810 Disk Drive	(With MPI Drive)

ATARI 810M ANALOG DISK DRIVE (MPI)
PARTS LIST

Assy	Part No.	Description	Location
Mount	78-74001	Cable-tie	
Mount	C012972	Common Base	
Mount	C017194	Mounting Plate Common	
Mount	CA014160-02	Mounting Plate Assy	(Unit with MPI Drive Mechanism)
Panel	C012976	Disk Panel Primary (MPI Drive)	
Panel	CA014159-02	Panel Assy	(Front) (MPI Drive)
Side	C014777	Diode LED	CR105,108 (Part of)
Side	C014069	Standoff LED	CR105,108 (Part of)
Side	CA014834	PC Board Side Assy	(Data Sep. installed)
Side/Shield	14-5102	Resistor ¼W 1K	R118,121-124,129
Side/Shield	14-5103	Resistor ¼W 10K	R105,109,113,134
Side/Shield	14-5104	Resistor ¼W 100K	R135,136
Side/Shield	14-5151	Resistor ¼W 150 Ohm	R117
Side/Shield	14-5152	Resistor ¼W 1.5K	R114
Side/Shield	14-5153	Resistor ¼W 15K	R108,112
Side/Shield	14-5221	Resistor ¼W 220 Ohm	R103
Side/Shield	14-5224	Resistor ¼W 220K	R127
Side/Shield	14-5271	Resistor ¼W 270 Ohm	R120,126
Side/Shield	14-5273	Resistor ¼W 27K	R131
Side/Shield	14-5331	Resistor ¼W 330 Ohm	R132
Side/Shield	14-5332	Resistor ¼W 3.3K	R115
Side/Shield	14-5333	Resistor ¼W 33K	R111
Side/Shield	14-5393	Resistor ¼W 39K	R104
Side/Shield	14-5471	Resistor ¼W 470 Ohm	R106
Side/Shield	14-5472	Resistor ¼W 4.7K	R110,116,128,133
Side/Shield	14-5473	Resistor ¼W 47K	R119,130
Side/Shield	14-5562	Resistor ¼W 5.6K	R101,102
Side/Shield	14-5750	Resistor ¼W 75 Ohm	R175
Side/Shield	31-1N914	Diode 1N914	CR120,121,122 (Alternate for P/N C060607)
Side/Shield	31-1N4001	Diode 1N4001	CR101-104,106
Side/Shield	CO18991	Transistor 2N3906	Q101,103,104
Side/Shield	34-2N3904	Transistor 2N3904	Q102,105,110,111
Side/Shield	C010174	Transistor Array	A106
Side/Shield	C010447	Transistor Array 4077	Z104
Side/Shield	C010745	IC MPU 6507	A101
Side/Shield	C010750	IC PIA 6532	A104
Side/Shield	C011299	IC Custom ROM	A102
Side/Shield	C011465-01	HEX CMOS Inverter 4069	Z103
Side/Shield	C014136	RF Shield Inside/Component	
Side/Shield	C014137	RF Shield Outside/Trace	
Side/Shield	C014138	Ground Bracket	
Side/Shield	C014179-02	Cap. Ceramic Axial 47pF (50V)	C101,103,119,131
Side/Shield	C014179-03	Cap. Ceramic Axial 10pF (50V)	C122
Side/Shield	C014179-04	Cap. Ceramic Axial 33pF (50V)	C141
Side/Shield	C014179-07	Cap. Ceramic Axial 62pF (50V)	C105
Side/Shield	C014180-03	Cap. Ceramic Axial 100 pF (50V)	C110,130,139,140
Side/Shield	C014180-07	Cap. Ceramic Axial 470pF (50V)	C106

ATARI 810M ANALOG DISK DRIVE (MPI)
PARTS LIST

Assy	Part No.	Description	Location
Side/Shield	C014180-10	Cap. Ceramic Axial 390pF (50V)	C111
Side/Shield	C014181-01	Cap. Ceramic Axial .001uF (25V)	C113,116-118, 123-129,134-138
Side/Shield	C014181-03	Cap. Ceramic Axial .1uF (25V)	C102,104,107-109,114,115,133
Side/Shield	C014316	Crystal 1.000000 Mhz	X101
Side/Shield	C014328	Transistor Array 6810	A103
Side/Shield	C014333	Transistor Array 4011	Z102
Side/Shield	C014334	Transistor Array 4013	Z101,105
Side/Shield	C014369	Cap. Elec Radial 4.7uF (35V)	C132
Side/Shield	C014379	Resistor Network (9 X 4.7K)	R176
Side/Shield	C014384	Inductor Ferrite Bead	L102,103
Side/Shield	C014386-02	Socket IC (14 pin)	XA106,XZ101-105
Side/Shield	C014386-07	Socket IC (24 pin)	XA102,103
Side/Shield	C014386-08	Socket IC (28 pin)	XA101
Side/Shield	C014386-09	Socket IC (40 pin)	XA104
Side/Shield	C014394	Transistor MPS-A06	Q106-109
Side/Shield	C014397-02	Switch Power	S102
Side/Shield	C014702	Inductor Axial 470uH	L101
Side/Shield	C014717-01	Connector (23 pin)	P101
Side/Shield	C014719-02	Connector (5 pin)	J101,102
Side/Shield	C014808-01	Diode Zener 1N5231B (5.1V)	CR107
Side/Shield	C017520	Socket DIP (40 pin)	J103
Side/Shield	C060607	Diode (1N4148)	CR120,121, 122 (Alternate listed)
Side/Shield	CA015325	LED & Standoff Assy	CR105,108
Side/Shield	CA060149	PC Board Side Shield Assy	
Top	C014105	Panel Label Cover	
Top	C014106	Hole Cover Label	
Top	CA014157	Upper Assy	
Disk Drive	FC100031	MPI Drive Belt	
Disk Drive	FA100032	MPI Load Pad Assembly	
Disk Drive	FA100033	MPI Rt. Hand Guide/Write Protect Assy	
Disk Drive	FA100035	MPI Ejector Assy	
Disk Drive	FA100034	MPI Band/Pully Assy	

ATARI 810 DISK DRIVE

MECHANICAL AND ELECTRICAL SPECIFICATIONS

Height	4.5 Inches
Width	9.5 Inches
Depth	12 Inches
Weight	5 Pounds
Power Adaptor	
Input	120 Volts AC, 60 Hz
Output*	9 Volts AC, 3 Amps
Power Usage*	30 Watts
Approvals*	UL
Clocking Frequency	1 MHz Crystal Controlled Oscillator
Media	ANSI Standard 5.25" Floppy Diskette
Track Density	48 TPI
Recording Density	2,938 BPI. (MAX)
Flux Density	5,876 FCI. (MAX)
Recording Format	
	Single Sided Single Density (128 Bytes/Sector) FM Encoding Method Soft Sectored 40 Tracks (18 Sectors/Track) Total of 720 Sectors
Disk Rotational Speed	288 RPM ± 1%
Average Latency	100 Milliseconds

*Analog Differences

Mechanical and Electrical Specifications (Cont)

Read/Write Head Gap	.013 Inches
Guard Band	.008 Inches
Average Data Transfer Rate	6K Baud (19.2K Baud max.)
Pad Pressure	17 Grams
Head Life	20,000 Hours (Normal Use)
Media Life	3×10^6 Passes On A Single Track
Power-up Delay	0.5 Seconds
Minimum Data Access Time	236 Milliseconds
Head Loading Time	35 Milliseconds
Head Settling Time	15 Milliseconds
Track to Track Access Time	5 Milliseconds
Temperature	
Operating	0 to 50 Degrees Centigrade
Non-Operating	-45 to 71 Degrees Centigrade
Relative Humidity	
Operating	8% to 80% (Non-Condensing)
Non-Operating	8% to 90% (Non-Condensing)
Altitude	
Operating	-500 Feet to 10,000 Feet
Non-Operating	-1,000 Feet to 50,000 Feet
MTBF	9,000 Hours
MTTR	1 Hour

APPENDIX C

ATARI 810 Disk Drive units containing the Tandon Drive Mechanism

Appendix C provides the information necessary to troubleshoot and repair Atari 810 Disk Drives with the Tandon Drive Mechanism instead of the Micro Peripherals, Inc. (MPI) Drive Mechanism.

The Tandon Drive Mechanism is plug-in compatible with existing Atari 810 Disk Drives with no change in the unit's electronics. To troubleshoot these units use the procedures for troubleshooting the Atari 810 Analog Disk Drive. Note that at some points there will be different procedures due to the mechanical differences between the MPI and the Tandon Drive Mechanism.

This Appendix is divided as follows:

1. Table 8C-1 shows Tandon/MPI Mechanical differences.

2. Page 8C-4 to 8C-16 gives step by step procedures and adjustments which are different for units which contain the Tandon Drive Mechanism.

3. Page 8C-17 to 8C-35 contains <u>all</u> of the flowcharts you will need in order to troubleshoot units which contain the Tandon Drive Mechanism.

Use Figure 8C-1 as reference for Tandon/MPI mechanical differences discussed in Table 8C-1.

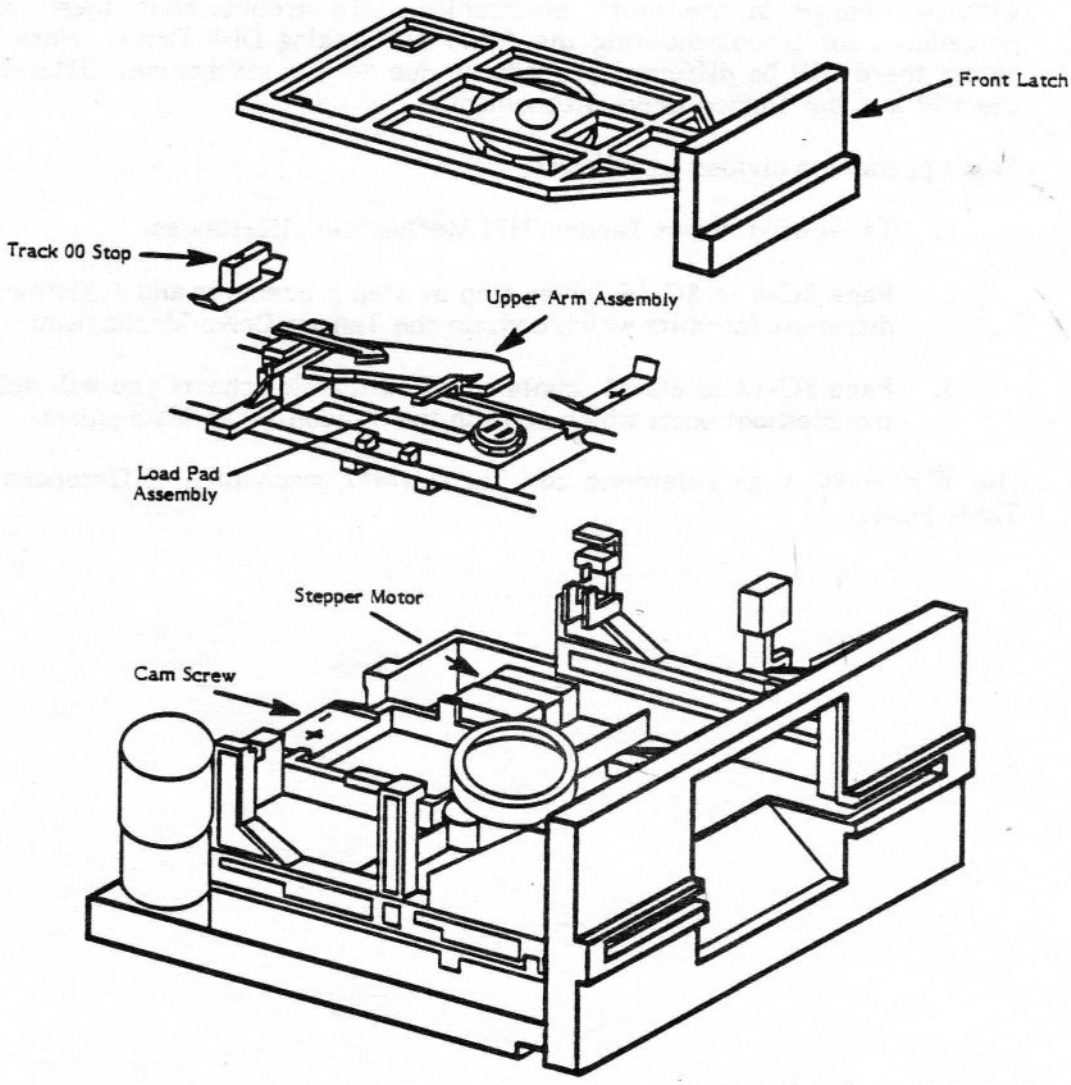

Figure 8C-1. Tandon Drive Mechanism

TABLE 8C-1

TANDON/MPI MECHANICAL DIFFERENCES

	TANDON	MPI
FRONT BEZEL	Operated by a front latch. No diskette eject mechanism. Raise the front latch to access diskette. Plastic guides and front latch inhibitor position the diskette.	Operated by a door release lever. Contains a diskette eject mechanism.
UPPER ARM ASSEMBLY (Alignment Program)	Contains no pressure spring. Adjust by turning the two nuts which secure the upper arm to the carriage. (See Pg 8C-5 for instructions)	Contains pressure spring assembly. Adjust pressure spring. (See Page 3-12 for instructions)
STEPPER MOTOR ADJUSTMENT (Alignment Program)	Adjust by turning the cam screw at rear of Drive Mechanism. (See Page 8C-7 for instructions)	Adjust by loosening setscrew to move Stepper Band Pulley. (See Page 3-14 for instructions)
TRACK 00 STOP (Alignment Program)	Adjust by monitoring increase and decrease in waveform amplitude. (See Page 8C-11 for instructions)	Adjust for 0.010 clearance. (See Page 3-17 for instructions)
WRITE PROTECT CIRCUIT	Microswitch Assembly (See Page 8C-13 for adjustment and replacement instructions)	Phototransistor

Test Equipment/Diagnostic Tests

To analyze failures in units containing the Tandon Drive Mechanism, use the equipment and Diagnostic Tests described in Section 3, page 3-1 to 3-18 **with the following exceptions:**

Adjustment methods are different for three alignment program procedures:

The procedures affected are:

- Head Load Pad Pressure (pg. 3-12)
- Head/Track Alignment (pg. 3-14)
- Track 00 Stop Adjustment (pg. 3-17)

Follow the instructions on the next pages for these adjustments.

NOTE: Use Test Points 2 & 3 on the Analog Board for Alignment Program procedures.

HEAD LOAD PAD PRESSURE

CAUTION: Adjustment of pad pressure requires great care and a light touch. Read all instructions thoroughly before attempting any adjustment.

Purpose: To check and adjust the head load pad pressure.

Procedure:

1. Press the BREAK key to halt the program and allow a new track to be selected.

2. Connect the oscilloscope probes to test points 2 and 3 on the Analog Board.

   Set the oscilloscope control to the following settings:

   Display: A+B
   Channel A: Normal
   Channel B: Inverted
   Channel A&B Time .5ms/Div (Calibrated)
   Channel A&B Volts .2v/Div (Calibrated)

3. Type the number 4 and press RETURN to step the head to track 33.

4. A broadband display appears on the scope when set properly.

5. Obtain a maximum output amplitude by pressing lightly with one finger on the pressure pad arm (See Figure 8C-2). An amplitude equal to or greater than 80% of maximum value is correct amplitude.

6. If the amplitude of the broadband waveform is not equal to 80%, continue with Steps 7-11.

7. Turn the two (2) nuts that attach the upper arm to the carriage assembly counter-clockwise one-quarter (1/4) turn (See Figure 8C-2). Use a 3/16" nut driver.

8. While monitoring the output, move the upper arm around the axis of the head until the output is the highest.

9. While holding the arm in the highest output position, turn the two (2) nuts that attach the upper arm to the carriage assembly clockwise.

10. Return to step 1 of this procedure to verify that the correct amplitude is obtained.

11. If correct amplitude cannot be obtained, replace the Upper Arm Assembly.

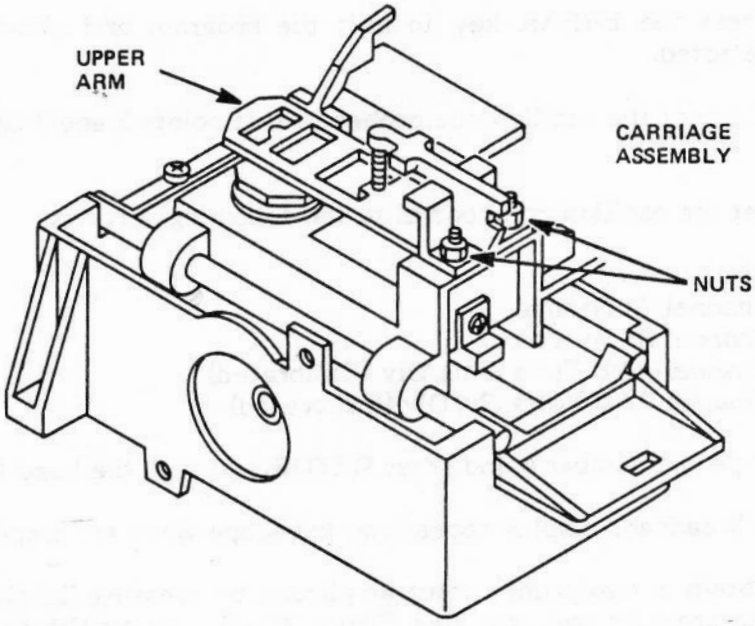

Figure 8C-2. Upper Arm and Nuts

HEAD/TRACK ALIGNMENT

Purpose: To check the head and track alignment and make any required adjustments.

Procedure:

1. Press the BREAK key to halt the program and allow a new track to be selected.

2. Connect the oscilloscope probes to test points 2 and 3 on the Analog Board.

   Set the oscilloscope controls to the following settings:

   Display: A+B
   Channel A: Normal
   Channel B: Inverted
   Channel A&B Time 5ms/DIV (Fully Uncalibrated)
   Channel A&B Volt .1V/DIV (Calibrated)

3. Type the number 2 and press RETURN. Head begins reading track 16.

4. When the scope is properly adjusted a cat's-eye pattern similar to Figure 8C-3 appears on the scope.

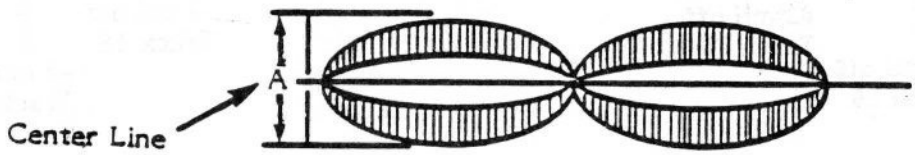

A = Amplitude

Figure 8C-3. Cat's-Eye Pattern

5. Compare the amplitude of the cat's-eyes. If each cat's-eye lobe pattern is equal in amplitude or within 80% of each other, no adjustment is required (See Figure 8C-4).

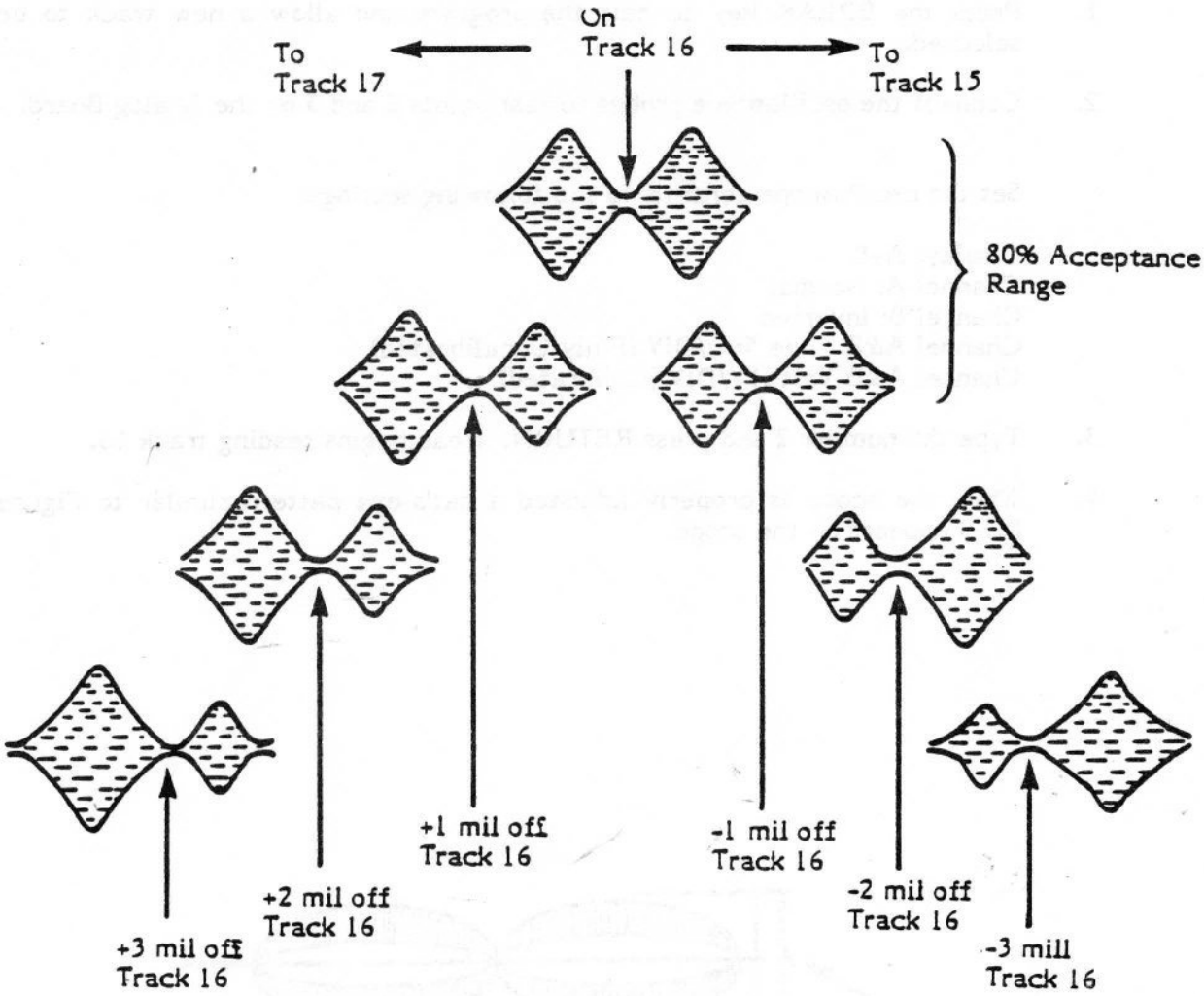

Figure 8C-4. Amplitude Variation of Cat's-Eyes.

6. If the cat's-eyes are not within tolerance, continue with the following steps. Follow the instructions with care and use a very light touch. This is a very delicate operation.

7. Press the BREAK key to halt the program.

8. When the busy light turns off, remove the Alignment diskette.

9. Power the disk drive down by turning the Power ON/OFF switch OFF.

10. Remove the bottom cover from the Disk Drive (See Page 6-4).

11. Carefully remove the three screws holding the Drive Mechanism to the common baseplate. Note that there are four screw holes in the baseplate -- the right rear screw (viewed from unit front) is no longer inserted.

12. Tip the Drive Mechanism on its side and loosen (DO NOT REMOVE) the two bottom module retaining screws (See Figure 8C-5). Turn the screws counterclockwise one-half turn with a Phillips screwdriver.

13. Turn the Drive Mechanism right-side up and place it on the common baseplate. Be sure no wiring harnesses are loose.

14. Turn the top module retaining screw counterclockwise one-half turn with a Phillips screwdriver (See Figure 8C-5).

15. Power up the disk drive and insert the Alignment Diskette when the busy light goes out.

16. Press the BREAK key, then type the number 2. Head begins reading track 16.

17. Turn the Cam screw (See Figure 8C-5) with a flatblade screwdriver to adjust for proper cat's-eyes pattern.

18. When the proper cat's-eyes pattern is obtained, tighten the top module retaining screw.

19. Press the BREAK key. When the busy light turns off, remove the Alignment Diskette.

20. Power the disk drive down by turning the Power ON/OFF switch OFF.

21. Turn the Drive Mechanism over and tighten the two bottom module retaining screws.

22. Carefully replace and tighten the three screws holding the Drive Mechanism to the common baseplate.

23. Power up the Disk Drive and return to Step 1 to re-check cat's-eyes pattern.

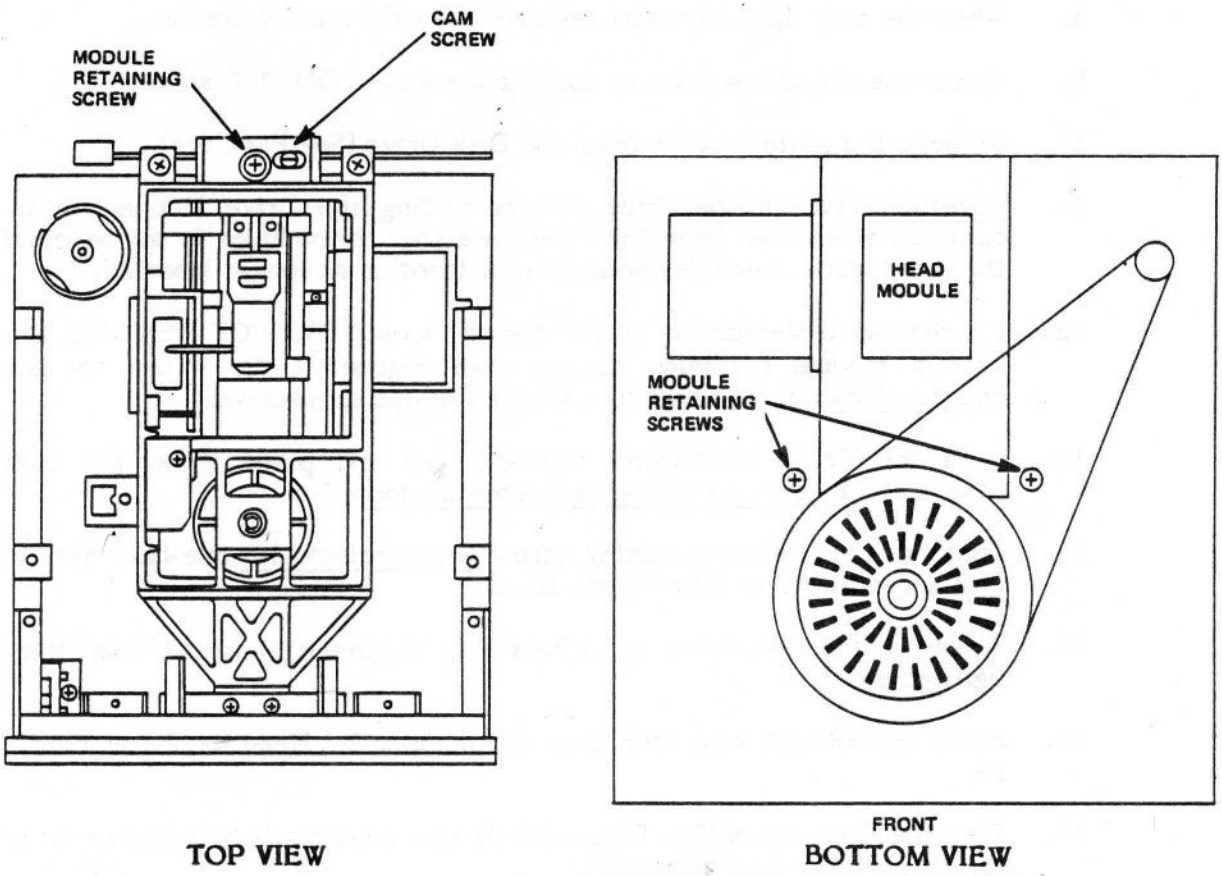

Figure 8C-5. Module Retaining Screws and Cam Screw

TRACK 00 STOP ADJUSTMENT

Purpose: To check the setscrew rear stop and make any required adjustments. Skip this procedure if the Speed Adjustment is correct.

NOTE: The Track 00 stop screw should be adjusted after the Cats-Eyes pattern is adjusted or the carriage seeks to a track lower than Track 00.

Procedure:

1. Press the BREAK key to halt the Align.3K program and allow a new track to be selected.

2. Connect the oscilloscope probes to test points 2 and 3 of the Analog Board.

   Set the oscilloscope controls to the following settings:

   Display: A+B
   Channel A: Normal
   Channel B: Inverted
   Channel A&B Time 2us/DIV (Calibrated)
   Channel A&B Volt 50 mV/DIV (Calibrated)

3. Type the value 0 and press RETURN. Head begins reading track 0.

4. When the scope is properly adjusted, a 60.2 KHz waveform similar to Figure 8C-6 appears on the screen.

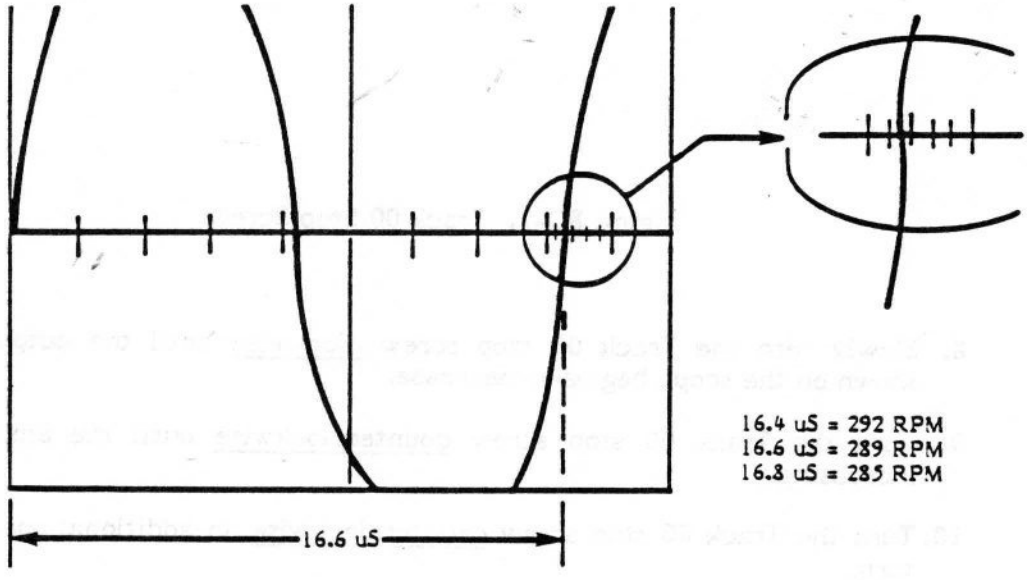

Figure 8C-6 Speed Adjustment Waveform

5. If the waveform appears correctly no adjustment is required.

6. With the Oscilloscope probes hooked up to test points 2 and 3 on the Analog Board observe the waveform on track 0 of the Alignment Diskette.

7. Turn the Track 00 stop screw counterclockwise two turns with a .050" Allen Wrench (See Figure 8C-7).

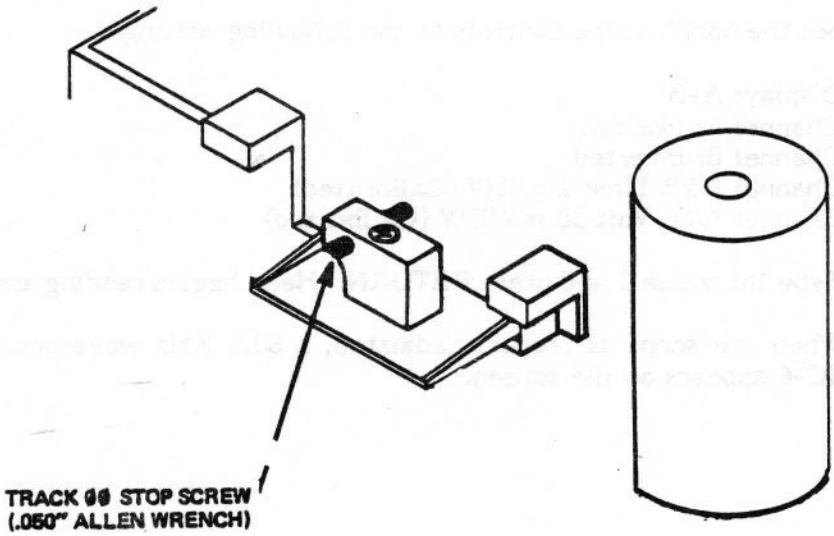

Figure 8C-7. Track 00 Stop Screw.

8. Slowly turn the Track 00 stop screw clockwise until the output amplitude shown on the scope begins to decrease.

9. Turn the Track 00 stop screw counterclockwise until the amplitude stops increasing.

10. Turn the Track 00 stop screw counterclockwise an additional one-eighth (1/8) turn.

This completes the Track 00 stop adjustment.

The following pages contain adjustment and replacement procedures.

To Adjust the Write Protect Switch

Use Figure 8C-8 as reference for the following steps.

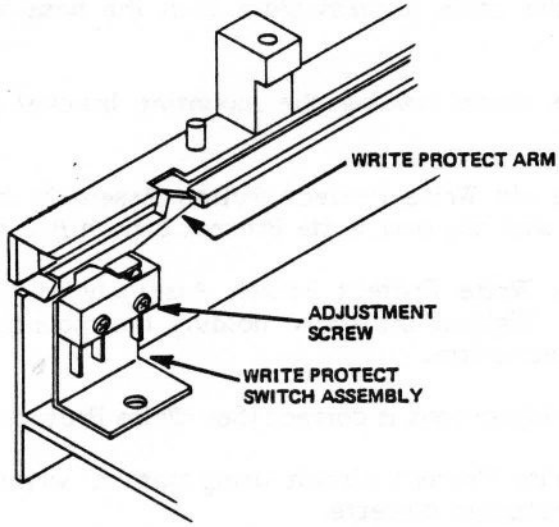

Figure 8C-8. Write Protect Switch Assembly

1. Loosen the adjustment screw that attaches the Write Protect Switch Assembly to the side of the Drive Mechanism.

2. Move the switch up or down, as required. Check to be sure that the switch moves when the Write Protect arm is pushed down and that it makes a clicking sound.

To Replace the Write Protect Switch

Use Figure 8C-8 as reference for the following steps.

1. Disconnect the wiring harness from the Power Supply board. (Be sure to note the polarity and location.)

2. Disengage the cable harness from both the base and the back of the Drive Mechanism.

3. Remove the screw holding the mounting bracket to the base of the Drive Mechanism.

4. Remove the old Write Protect Switch Assembly from the mounting bracket and replace with the new Write Protect Switch Assembly.

5. Position the Write Protect Switch Assembly at the left side of the Drive Mechanism. Tighten the screw holding the mounting bracket to the base of the Drive Mechanism.

6. Be sure the adjustment is correct (See Write Protect Adjustment instructions).

7. Test the Write Protect circuit using both a write protected diskette and a non-write protected diskette.

To Replace Upper Arm Assembly:

Use Figure 8C-9 as reference for the following steps.

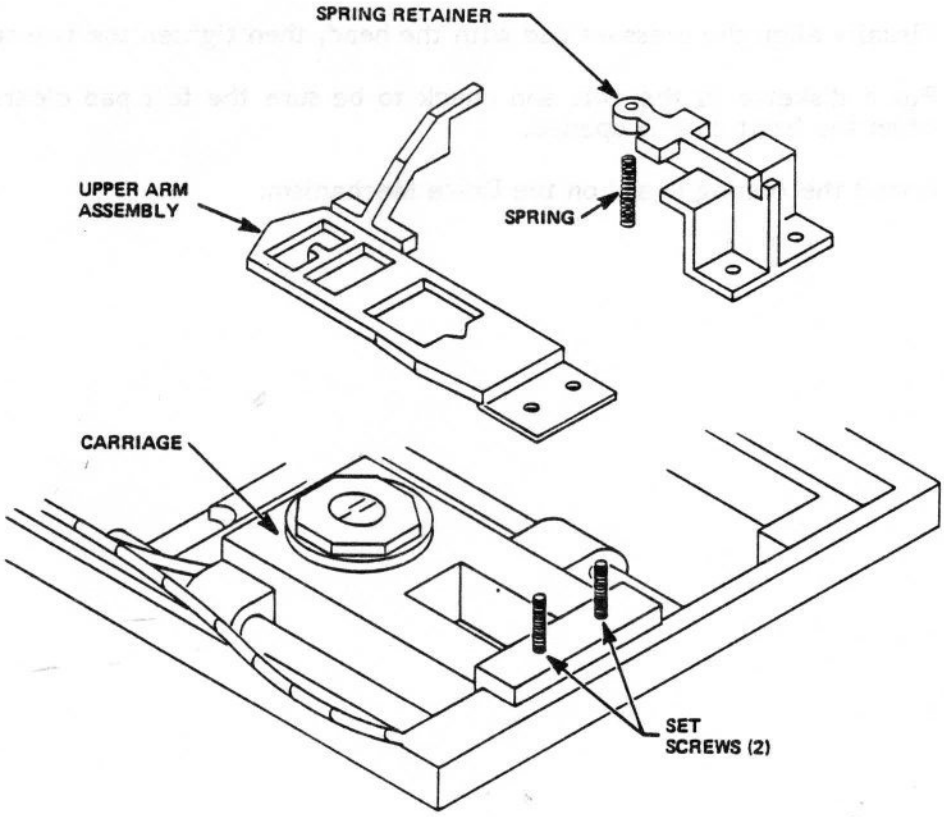

Figure 8C-9. Upper Arm Assembly

1. Remove the Analog Board from the Drive Mechanism.
2. Close the door to the Drive Mechanism.
3. Remove the two nuts that attach the Upper Arm to the Carriage Assembly.
4. Carefully remove the spring retainer and spring.
5. Remove the Upper Arm Assembly and replace with the new Upper Arm Assembly.

6. Set the spring and spring retainer in place. Be sure that the spring is seated at both ends.

7. Install the two setscrews that hold the Upper Arm Assembly and spring retainer in place.

8. Visually align the pressure pad with the head, then tighten the two setscrews.

9. Put a diskette in the unit and check to be sure the felt pad clears the diskette when the front door is opened.

10. Install the Analog Board on the Drive Mechanism.

DIAGNOSTIC FLOWCHARTS

The Diagnostic Flowchart is intended to be easy to use and the primary aid when troubleshooting the 810 Disk Drive containing the Tandon Drive Mechanism. Follow the prompts in the order presented. When a question is asked, follow the line from the box that best applies to your unit's condition. When that line terminates with a letter inside a circle, note that a page number is near it (i.e., pg. 8C- 18). Turn to that page within this appendix, locate the letter in another circle, and continue the diagnosis. The flowchart leaves nothing to chance. It tells you when to perform a specific test and when to replace components. Section 3, Test Equipment/Diagnostic Tests contains detailed instructions for each of the tests referenced in this section.

NOTE: Pages 8C-4 to 8C-16 explain step by step adjustment methods which are different from MPI adjustments due to mechanical differences in the Tandon Drive Mechanism.

SWAPOUT PROCEDURE

Many places in the diagnostic flowchart, a box tells you to "swapout" a component, a chip, or a number of chips in a particular order. The "swapout" instruction means that you should replace the indicated components (one at a time) with a known-good component of the same type. The 810 unit should then be tested with the new, known-good component in place to see whether the swapout solved the problem being checked. If the swapout did not fix the problem, the known good component should be removed, and the original component reinserted. In this way, you avoid needlessly replacing good components.

REPLACE IN ORDER

The "replace in order" instruction means that you should replace the components indicated in the order listed until the result called out in the previous block is obtained.

N - Some lines terminate with an N inside a circle. When this occurs, call your Atari Repair Hotline.

Inside California
(800) 672-1466

Outside California
(800) 538-1535

Initial Power-Up Sequence

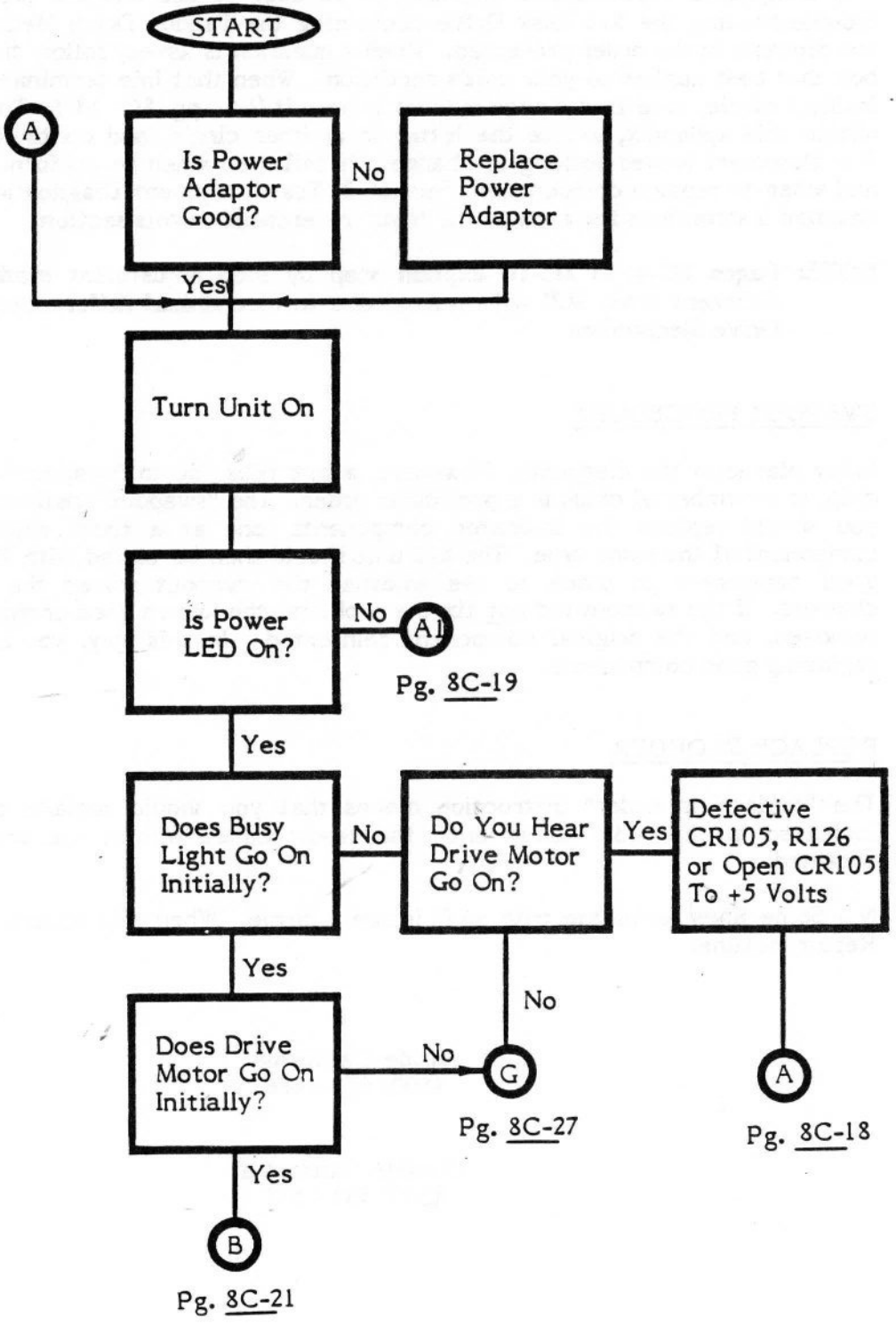

Initial Power-Up Sequence (cont)

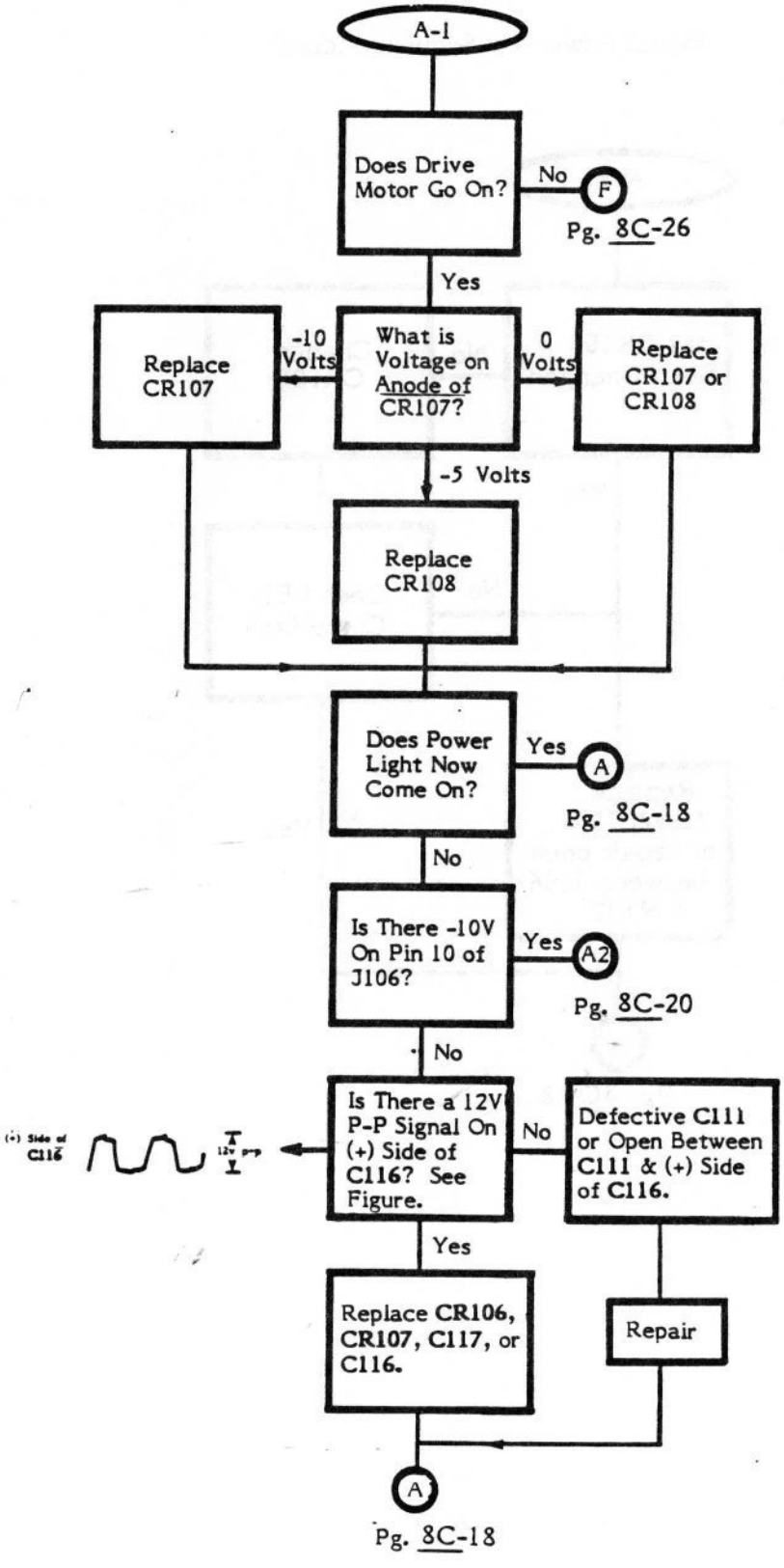

NOTE: Numbers in **bold type** indicate power supply components only. In later revisions these numbers will be changed to eliminate confusion with sideboard component numbers.

Initial Power-Up Sequence (cont)

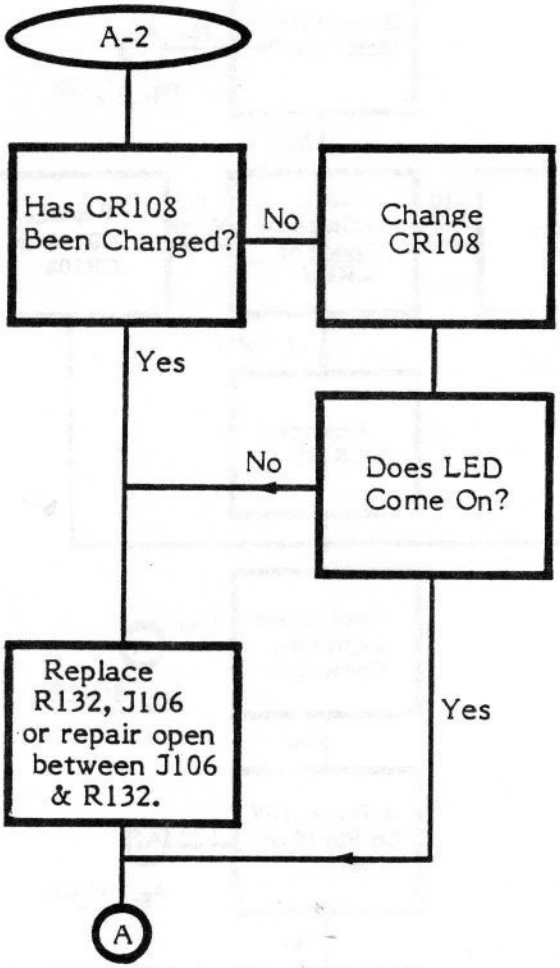

Pg. 8C-18

Initial Power-Up Sequence (cont)

NOTE: Numbers in **bold type** indicate power supply components only. In later revisions these numbers will be changed to eliminate confusion with sideboard component numbers.

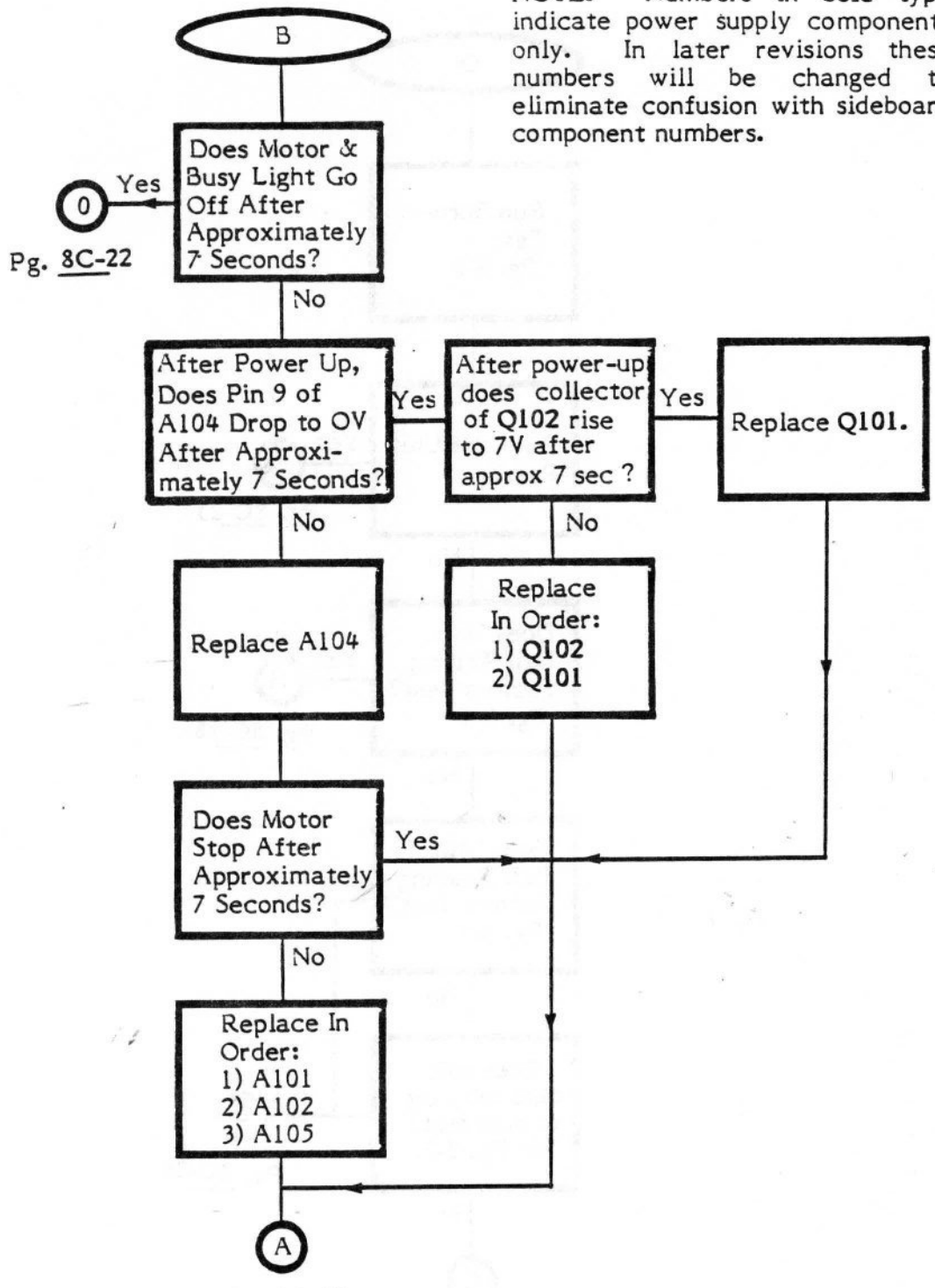

Pg. 8C-18

Burn-In Test

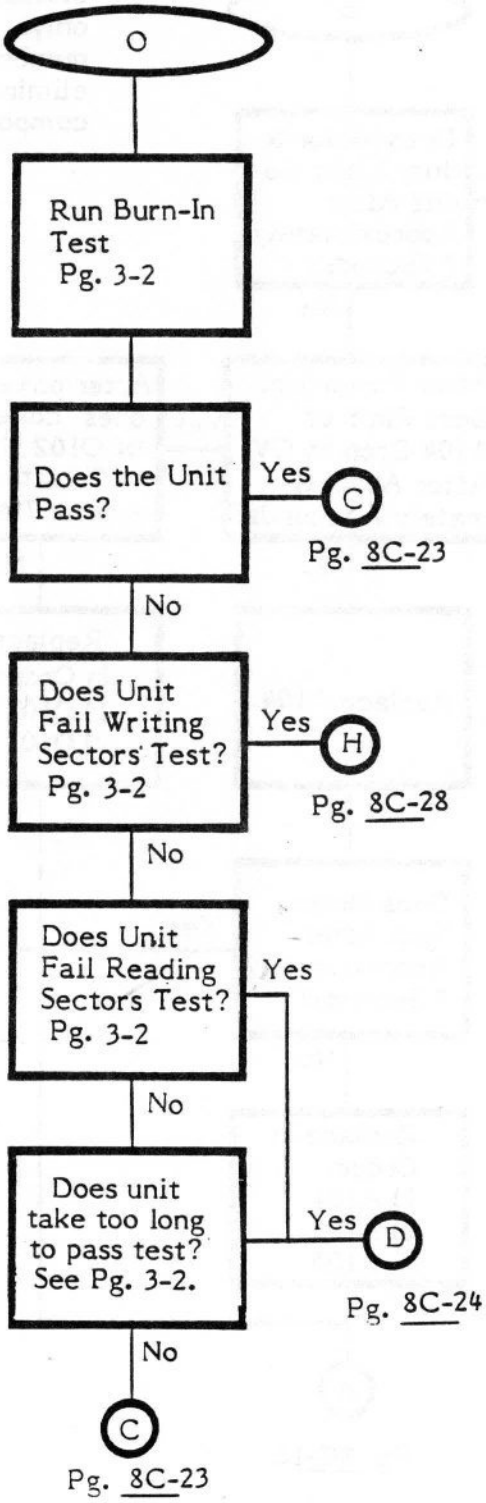
O
Run Burn-In Test Pg. 3-2
Does the Unit Pass?
Yes
C
Pg. 8C-23
No
Does Unit Fail Writing Sectors Test? Pg. 3-2
Yes
H
Pg. 8C-28
No
Does Unit Fail Reading Sectors Test? Pg. 3-2
Yes
No
Does unit take too long to pass test? See Pg. 3-2.
Yes
D
Pg. 8C-24
No
C
Pg. 8C-23

DOS Verification Test

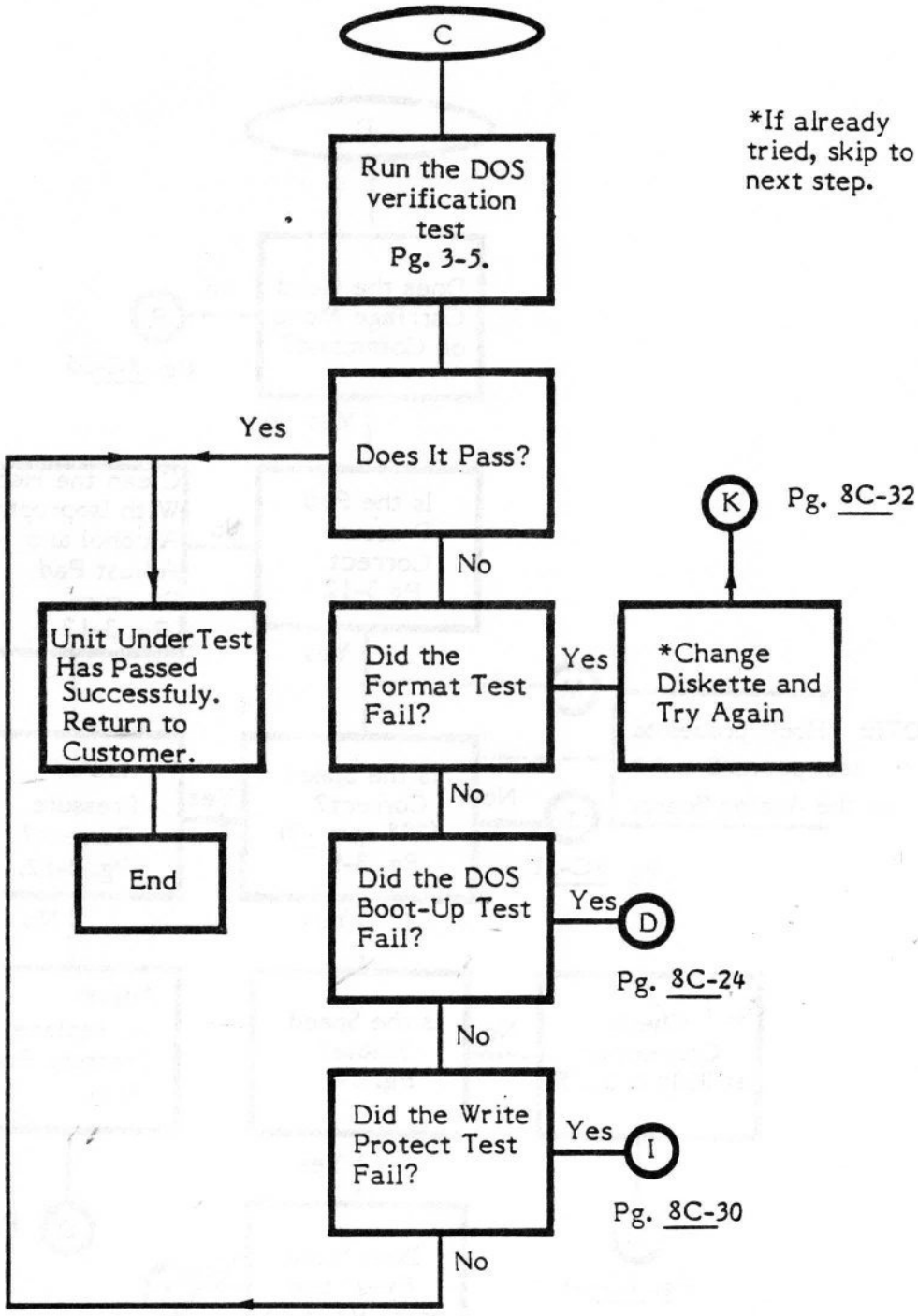

Alignment Program

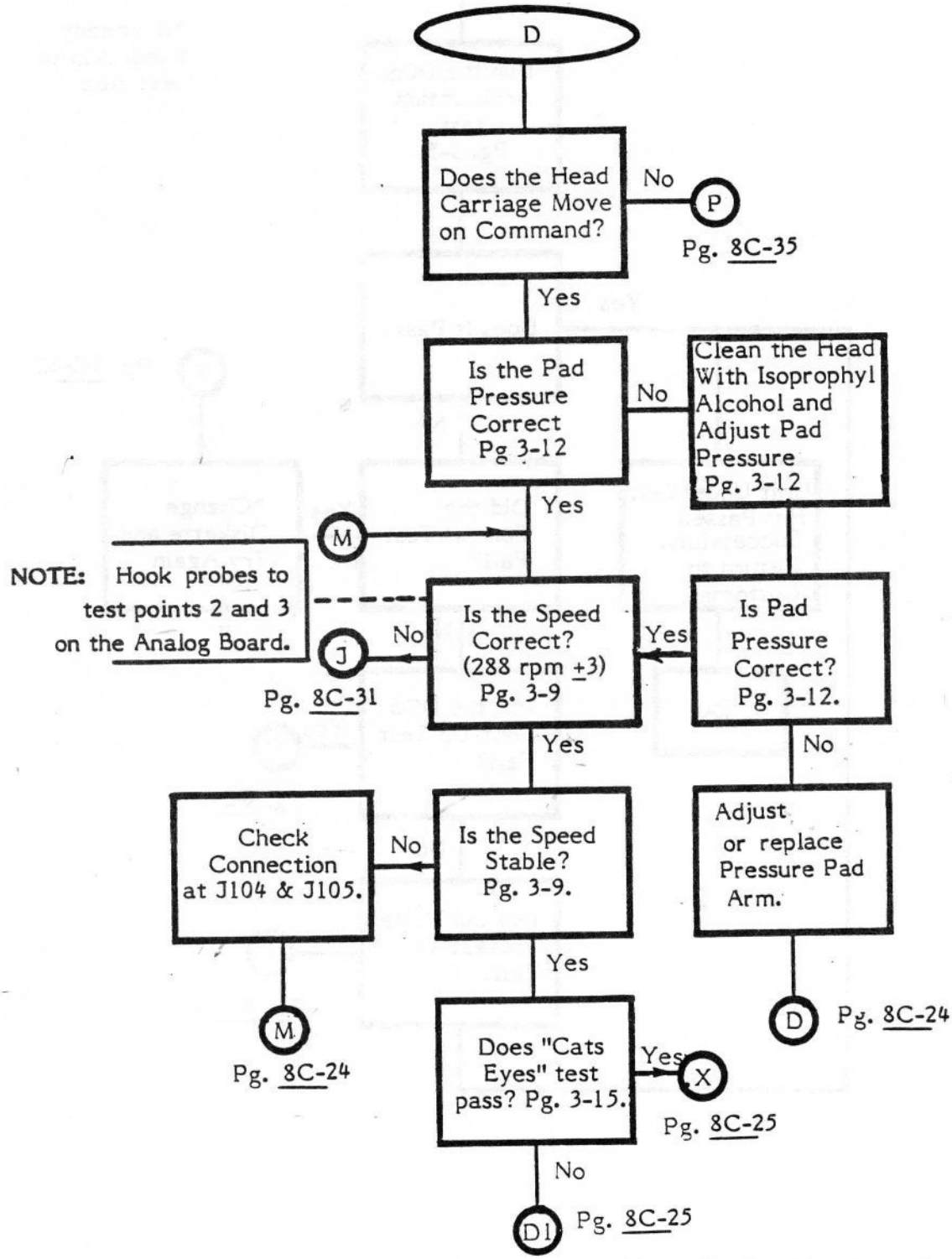

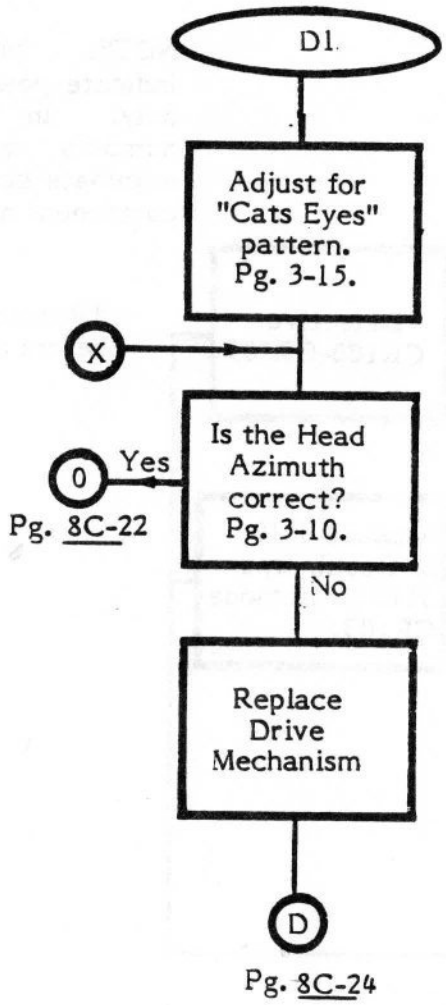
D1.
Adjust for "Cats Eyes" pattern. Pg. 3-15.
X
Is the Head Azimuth correct? Pg. 3-10.
Yes
0
Pg. 8C-22
No
Replace Drive Mechanism
D
Pg. 8C-24

No Power Troubleshooting

NOTE: Numbers in **bold type** indicate power supply components only. In later revisions these numbers will be changed to eliminate confusion with sideboard component numbers.

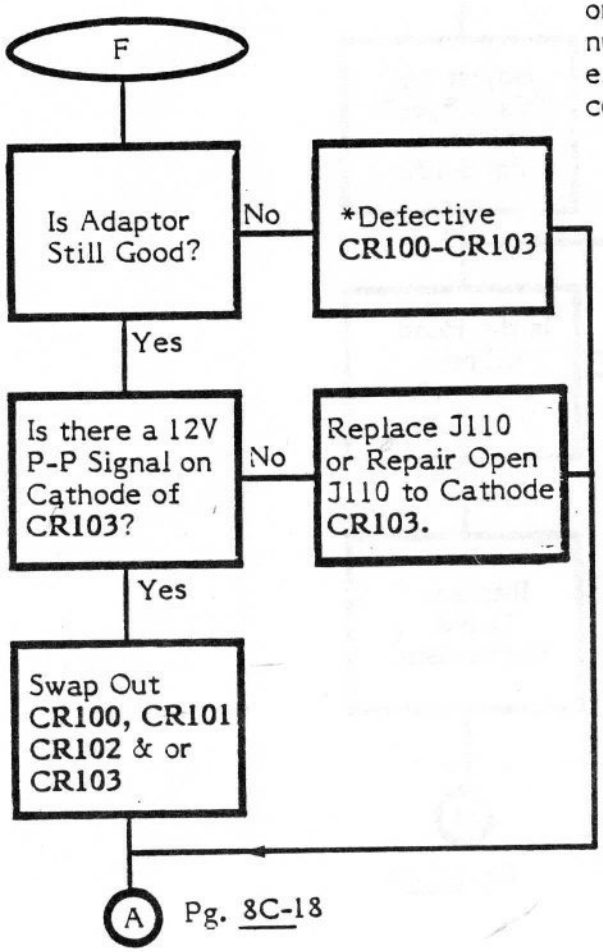

*Replace these components before plugging in another adaptor.

Drive Motor Troubleshooting

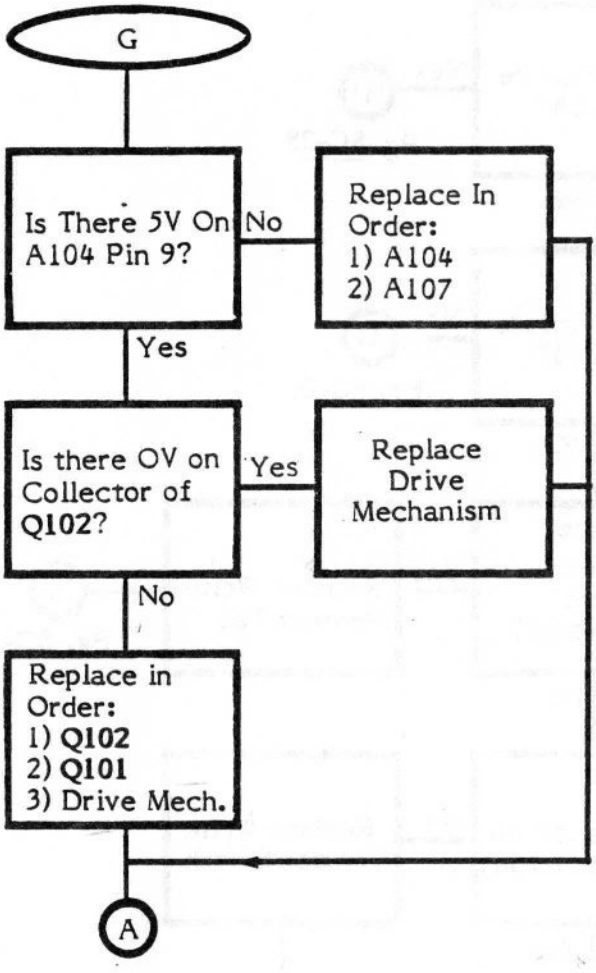

Pg. 8C-18

NOTE: Numbers in **bold type** indicate power supply components only. In later revisions these numbers will be changed to eliminate confusion with sideboard component numbers.

Write Logic Troubleshooting

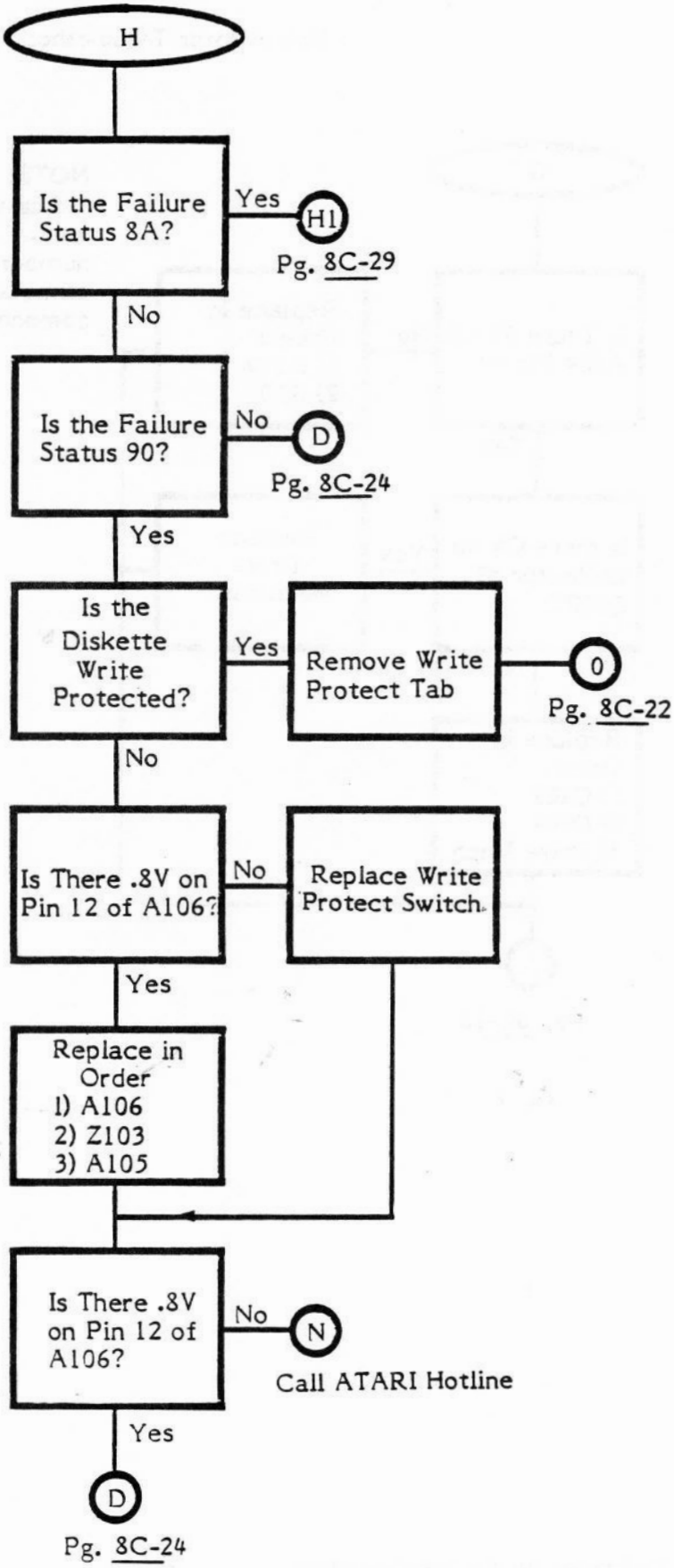

Write Logic Troubleshooting - Part II

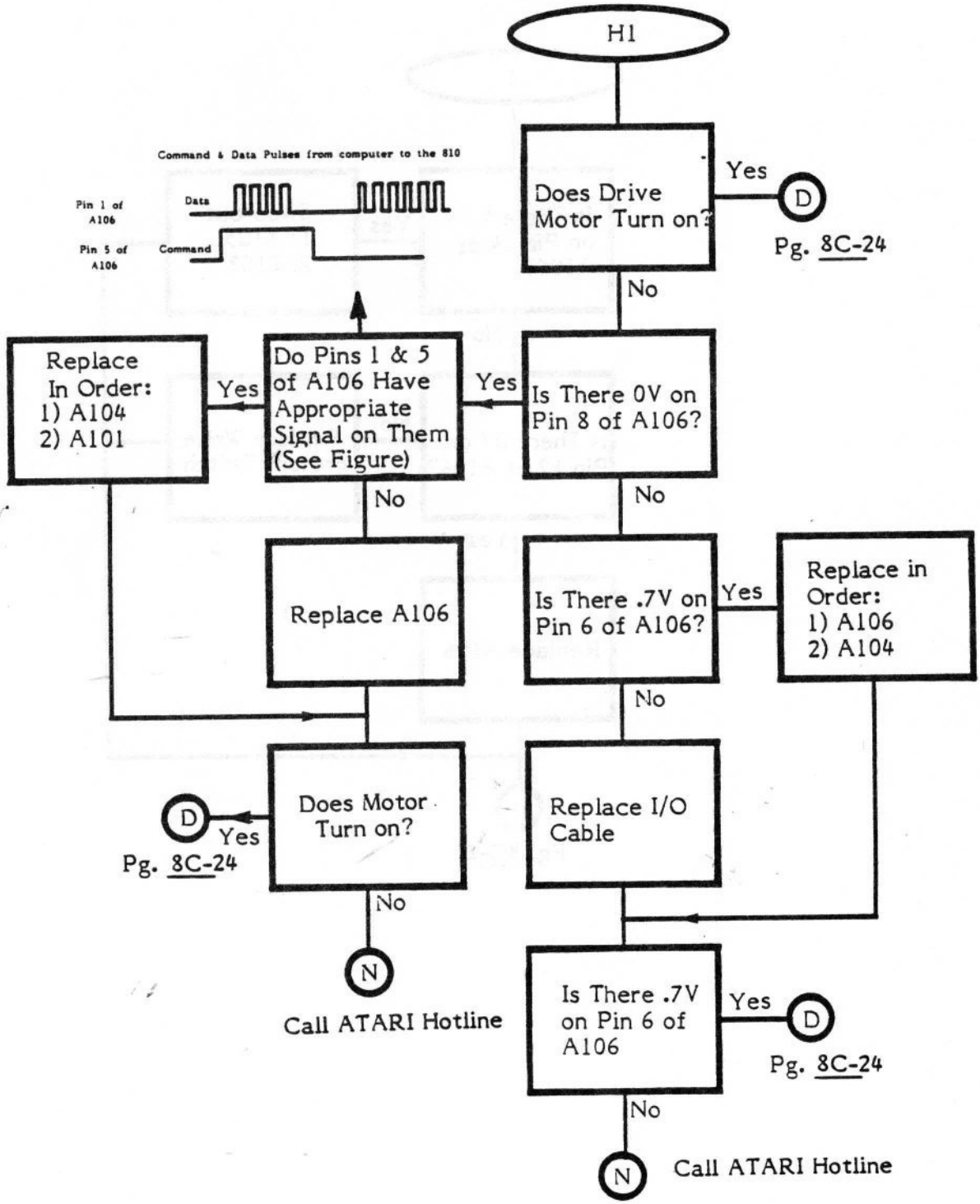

Write Protect Troubleshooting

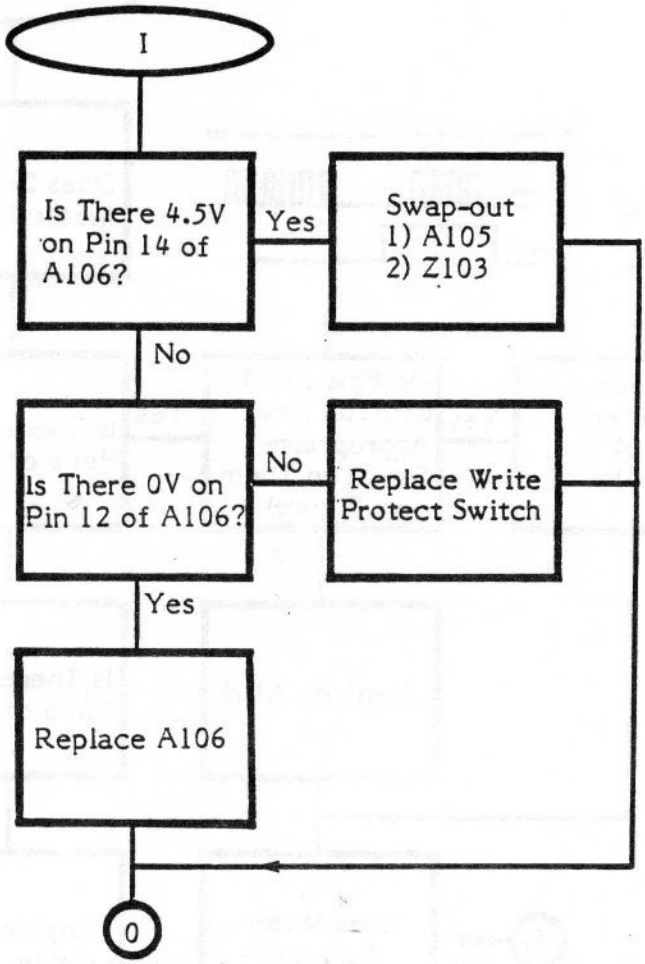

Pg. 8C-22

Speed Troubleshooting

NOTE: Numbers in **bold type** indicate power supply components only. In later revisions these numbers will be changed to eliminate confusion with sideboard component numbers.

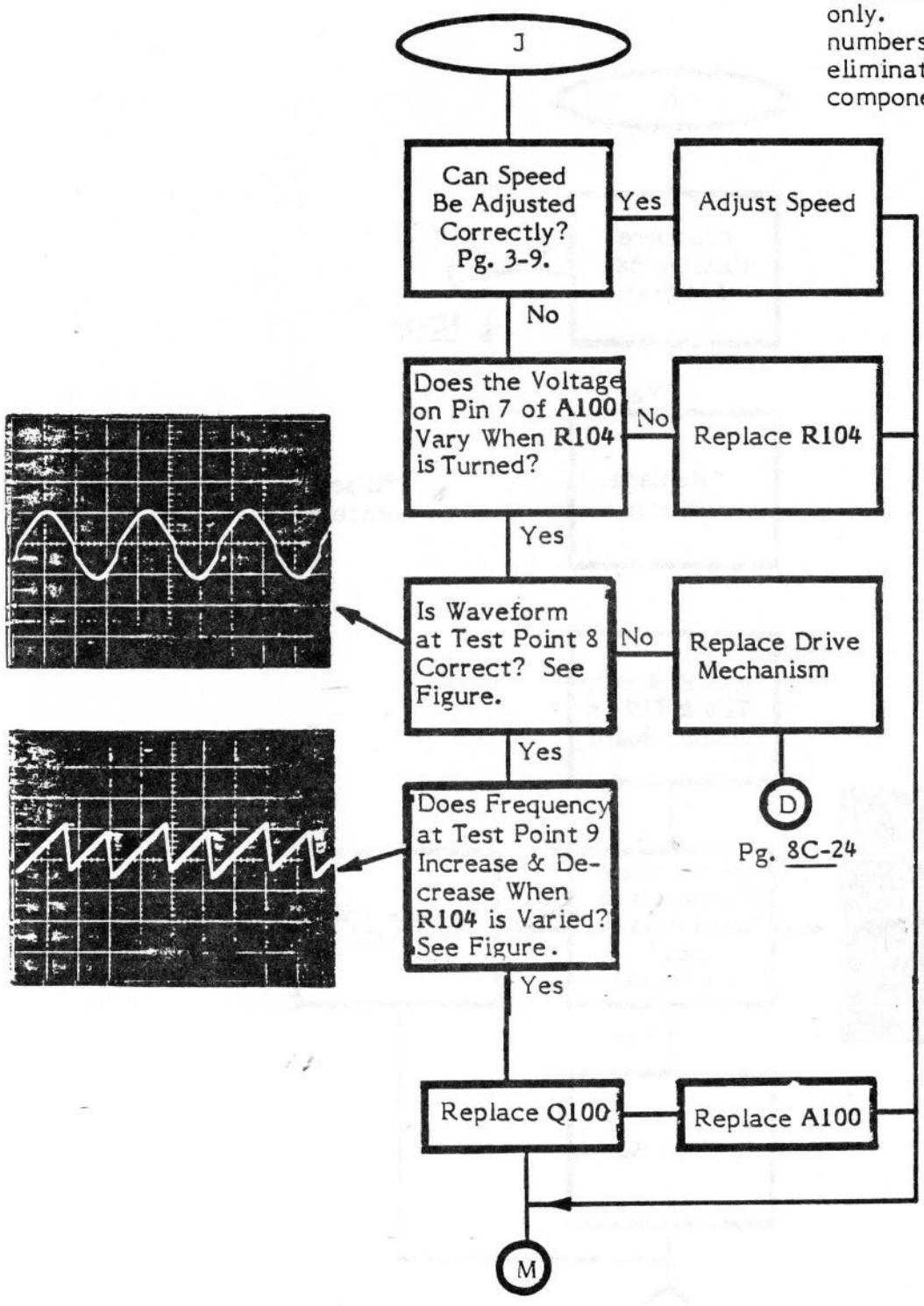

Pg. 8C-24

Fail Format Troubleshooting

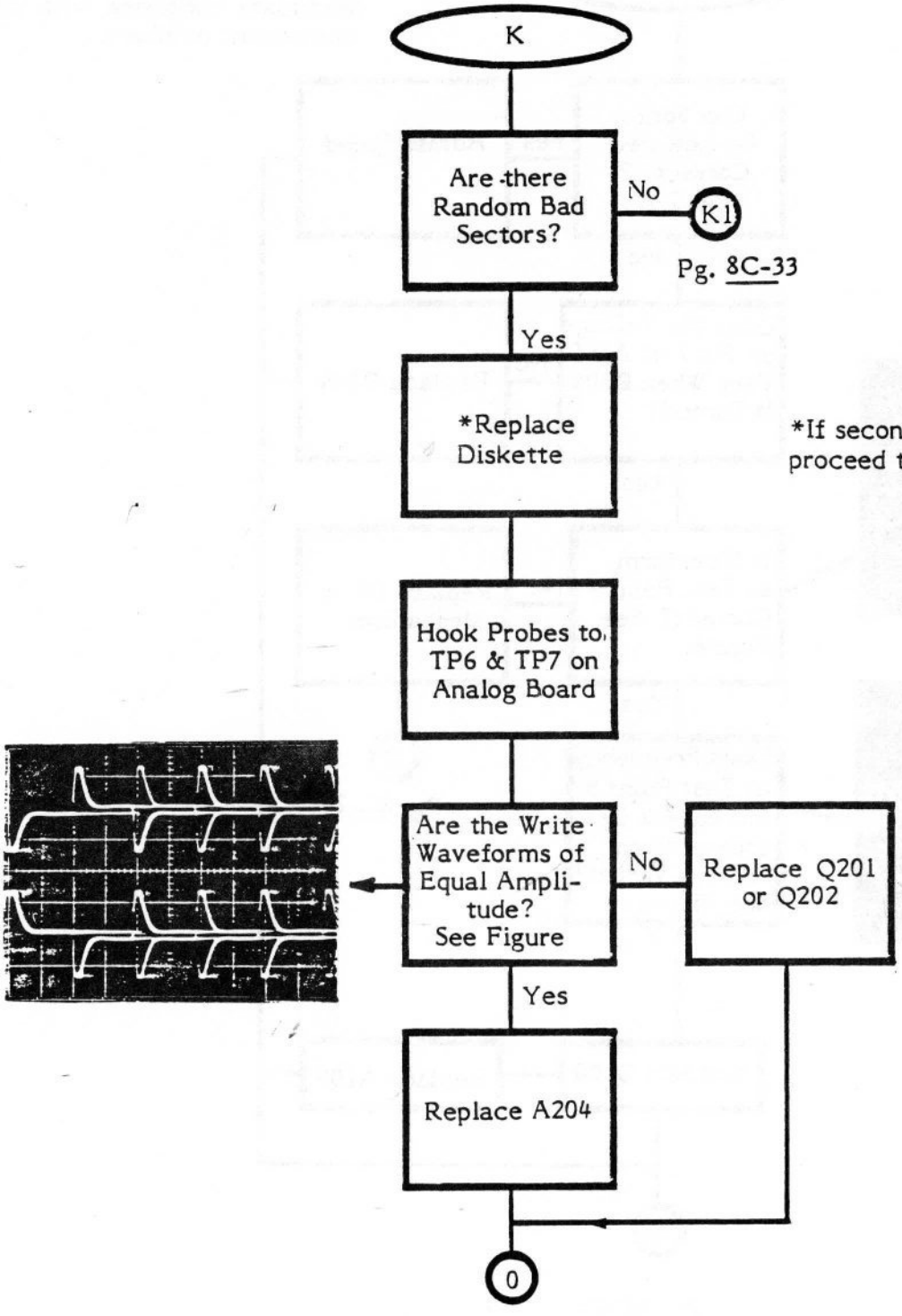

Fail Format Troubleshooting (cont)

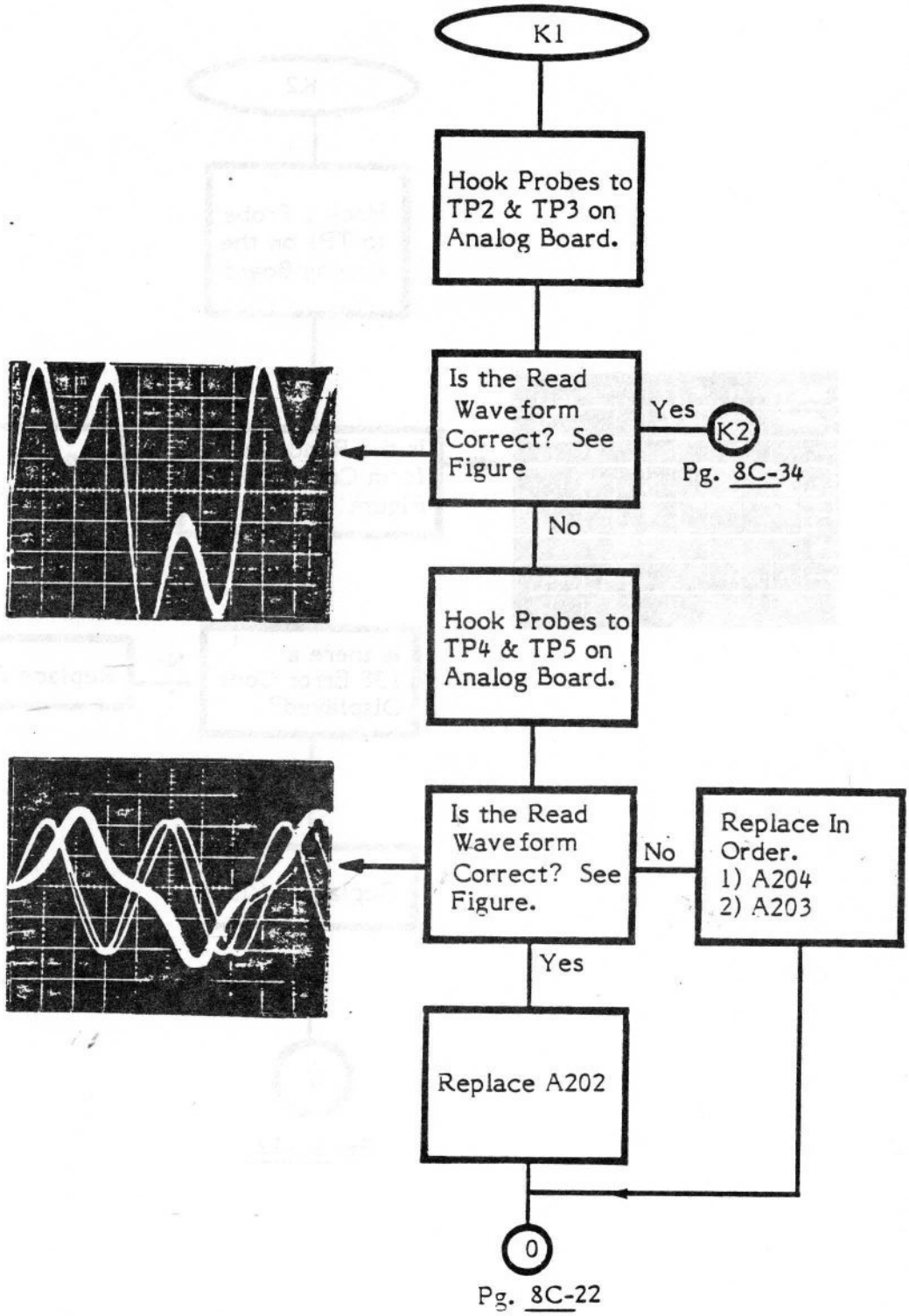

Fail Format Troubleshooting (cont)

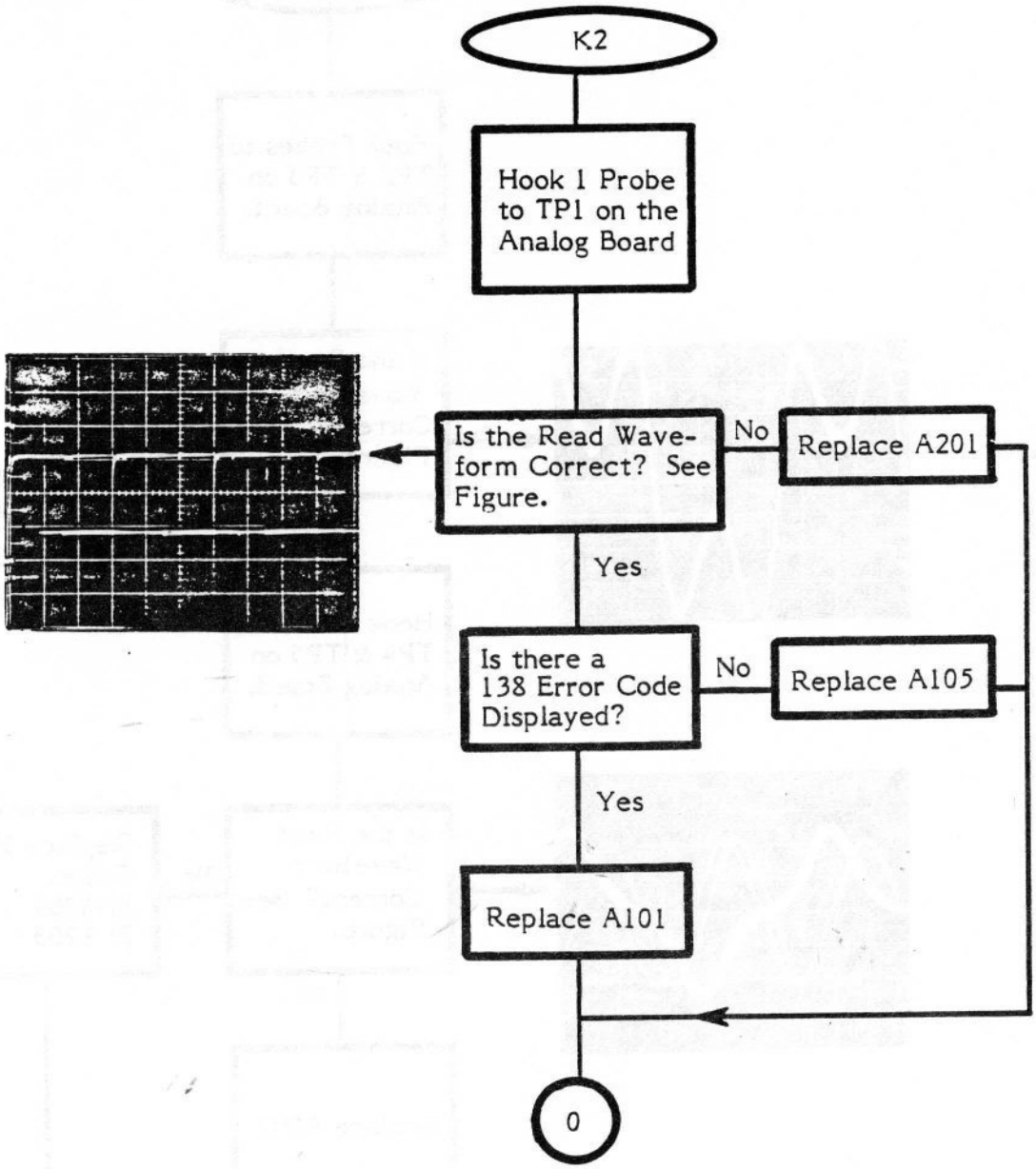

Pg. 8C-22

Stepper Motor Troubleshooting

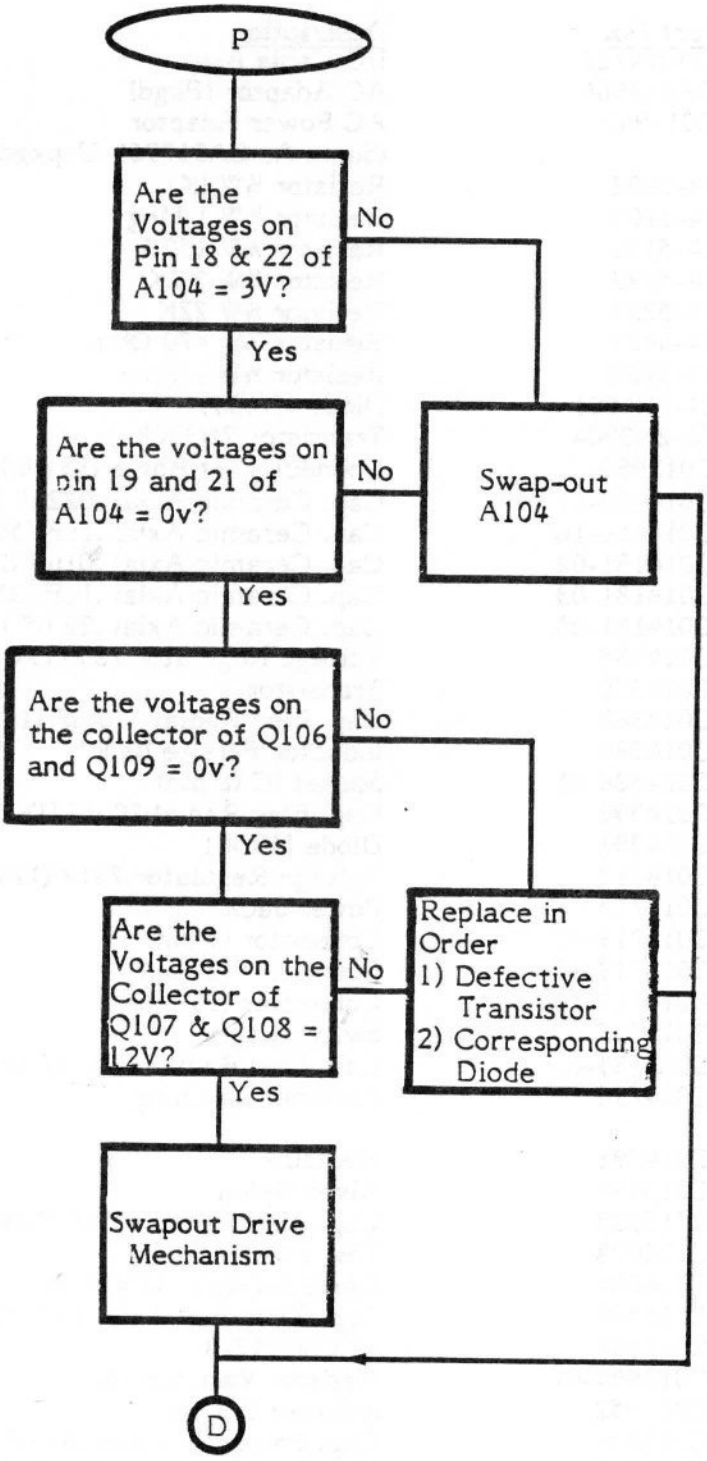

Pg. 8C-24

ATARI 810T ANALOG DISK DRIVE (TANDON)
PARTS LIST

Assy	Part No.	Description	Location
	CA014122	I/O Cable Assy	
	CA017964	AC Adaptor (Pkgd)	
	C017945	AC Power Adaptor (Same As CA017964-Unpkgd)	
Ana P/S	14-5102	Resistor ¼W 1K	R103,105,110,111
Ana P/S	14-5105	Resistor ¼W 1 Meg	R101,107
Ana P/S	14-5154	Resistor ¼W 150K	R108
Ana P/S	14-5222	Resistor ¼W 2.2K	R112,113
Ana P/S	14-5223	Resistor ¼W 22K	R102,114
Ana P/S	14-5471	Resistor ¼W 470 Ohm	R106,109
Ana P/S	15-51R0	Resistor ½W 1 Ohm	R100
Ana P/S	31-1N4001	Diode 1N4001	CR104,105
Ana P/S	34-2N3904	Transistor 2N3904	Q101,102
Ana P/S	C012995	Connector Rt Angle (13 pin)	J107,108
Ana P/S	C014180-11	Cap. Ceramic Axial .022uF (50V)	C106
Ana P/S	C014180-16	Cap. Ceramic Axial .1uF (50V)	C105
Ana P/S	C014181-02	Cap. Ceramic Axial .01uF (25V)	C102,114
Ana P/S	C014181-03	Cap. Ceramic Axial .1uF (25V)	C108,111,115
Ana P/S	C014181-05	Cap. Ceramic Axial .22 uF (25V)	C109
Ana P/S	C014348	Voltage Regulator 7805 (5V)	J104
Ana P/S	C014350	Transistor	Q112
Ana P/S	C014368	Cap. Elec Radial 470 uF (16V)	C116,117
Ana P/S	C014384	Inductor Ferrite Bead	L101
Ana P/S	C014386-01	Socket IC (8 pin)	XA100
Ana P/S	C014392	Cap. Elec Radial 10 uF (16V)	C107
Ana P/S	C014398	Diode MR501	CR100-103
Ana P/S	C014712	Voltage Regulator 7812 (12V)	J105
Ana P/S	C014715	Power Jack	J110
Ana P/S	C014719-02	Connector (5 pin)	J103
Ana P/S	C014719-03	Connector (23 pin)	J106
Ana P/S	C014719-10	Connector (10 pin)	J102
Ana P/S	C014725	Switch Logic	S101
Ana P/S	C014780-02	Cap. Elec Radial 4700 uF (25V)	C110,112
Ana P/S	C014796	Fastener Latching	Alternate for C015344
Ana P/S	C014798	Heatsink	Part of Q100
Ana P/S	C015344	Rivet Nylon	
Ana P/S	C015505	Cap. Elec Radial 47 uF (16V)	C100,101
Ana P/S	C016028	Test Points	TP1-9
Ana P/S	C016364	Diode Schottky (1N5818)	CR106,107
Ana P/S	C016569	Cap. Tantalum Axial 1 uF (20V)	C103
Ana P/S	C017101	IC LM2917-8	A100
Ana P/S	C017949-01	Resistor Variable 1K	R104
Ana P/S	C017952	Inductor 3.3 uH	L102
Ana P/S	C017954	Cap. Polyester Axial .01 uF (25V)	C104
Ana P/S	C017957	Cap. Elec Radial 4700 uF (35V)	C113
Ana P/S	CA016530	Transistor Assy	Q100
Ana P/S	CA017937	PC Board Analog Power Supply	
Analog	14-5100	Resistor ¼W 10 Ohm	R200

ATARI 810T ANALOG DISK DRIVE (TANDON)
PARTS LIST (cont)

Assy	Part No.	Description	Location
Analog	14-5102	Resistor ¼W 1K	R202
Analog	14-5103	Resistor ¼W 10K	R204,205
Analog	14-5123	Resistor ¼W 12K	R223
Analog	14-5202	Resistor ¼W 2K	R201,
Analog	14-5220	Resistor ¼W 22 Ohm	R226
Analog	14-5224	Resistor ¼W 220K	R213
Analog	14-5302	Resistor ¼W 3K	R212,220
Analog	14-5471	Resistor ¼W 470 Ohm	R225
Analog	14-5472	Resistor ¼W 4.7K	R214,216
Analog	14-5512	Resistor ¼W 5.1K	R224
Analog	14-5622	Resistor ¼W 6.2K	R215,217
Analog	14-5680	Resistor ¼W 68 Ohm	R211
Analog	14-5681	Resistor ¼W 680 Ohm	R209,210
Analog	14-5750	Resistor ¼W 75 Ohm	R206
Analog	14-5821	Resistor ¼W 820 Ohm	R207,208
Analog	14-2142	Resistor ¼W 1.4K ± 2%	R218
Analog	15-5360	Resistor ½W 36 Ohm	R227
Analog	31-1N914	Diode 1N914	CR202,204,205 (Alternate for P/N C060607)
Analog	C018991	Transistor 2N3906	Q201-205
Analog	C014179-08	Cap. Ceramic Axial 82pF (50V)	C215
Analog	C014180-13	Cap. Ceramic Axial 330pF (50V)	C209
Analog	C014180-14	Cap. Ceramic Axial 680pF (50V)	C210
Analog	C014180-15	Cap. Ceramic Axial .001uF (50V)	C207
Analog	C014180-16	Cap. Ceramic Axial .1uF (50V)	C211,212,217
Analog	C014181-02	Cap. Ceramic Axial .01uF (25V)	C203,204
Analog	C014181-03	Cap. Ceramic Axial .1uF (25V)	C206,208,213, 214,216
Analog	C014181-07	Cap. Elec Radial .47uF (25V)	C202,205
Analog	C014332	IC LM311	A201
Analog	C014386-01	Socket IC (8 pin)	XA201
Analog	C014386-02	Socket IC (14 pin)	XA202,203
Analog	C014386-03	Socket IC (16 pin)	XA204
Analog	C014392	Cap. Elec Radial 10uF (16V)	C200,201
Analog	C014721-03	Connector Rt Angle (5 pin)	J209
Analog	C014721-04	Connector Rt Angle (10 Pin)	J201
Analog	C014808-06	Diode Zener 1N5235B (6.8V)	CR203
Analog	C016028	Test Points	TP1-12
Analog	C016364	Diode Schottky 1N5818	CR201
Analog	C017948-01	Inductor 150uH (7 Ohm)	L201,202
Analog	C017948-02	Inductor 680uH (30 Ohm)	L203,204
Analog	C017950	IC CMOS Analog Multi-plexer (4052)	A204
Analog	C017951	IC NE592	A202,203
Analog	C017956	Voltage Regulator 79L05	VR201
Analog	C060607	Diode (1N4148)	CR202,204,205 (Alternate listed)
Analog	CA017936	PC Board Analog	

ATARI 810T ANALOG DISK DRIVE (TANDON)
PARTS LIST (cont)

Assy	Part No.	Description	Location
Analog	CA017947	Interconnect Cable (Connects Analog to Analog P/S) (Specify Tandon Drive Mech.)	
Bottom	88-1004	Rubber Feet	(Alternate for P/N C016848)
Bottom	88-1010	Mounting Pad	
Bottom	C014324	Boss Fastener	
Bottom	C016028	Post Header	
Bottom	C016848	Foot Plug	(Alternate Listed)
Bottom	CA014158	Lower Assy	
Bottom	CA014318	Fastener Base Assy	
Bottom	C012972	Common Base	
Data Sep	14-5103	Resistor ¼W 10K	R202
Data Sep	14-5182	Resistor ¼W 1.8K	R200,201
Data Sep	14-5221	Resistor ¼W 220 Ohm	R205
Data Sep	14-5472	Resistor ¼W 4.7K	R206
Data Sep	14-5473	Resistor ¼W 47K	R203,204
Data Sep	31-1N914	Diode 1N914	CR200 (Alternate for P/N C060607)
Data Sep	34-2N3904	Transistor 2N3904	Q200
Data Sep	C014179-08	Cap. Ceramic Axial 82pF (50V)	C201
Data Sep	C014181-01	Cap. Ceramic Axial .001uF (25V)	C208
Data Sep	C014181-02	Cap. Ceramic Axial .01uF (25V)	C203,205,207
Data Sep	C014181-03	Cap. Ceramic Axial .1uF (25V)	C200,202,204,206
Data Sep	C014329	IC FDC 1771	A203
Data Sep	C014384	Inductor Ferrite Bead	L200
Data Sep	C014386-02	Socket IC (14 pin)	XA201,205,207,208
Data Sep	C014386-03	Socket IC (16 pin)	XA204,206
Data Sep	C014386-09	Socket IC (40 pin)	XA203
Data Sep	C016018	Crystal 4.000000 Mhz	X200
Data Sep	C016045	IC 74LS74	A201,207
Data Sep	C017096	IC 74LS04	A208
Data Sep	C017097	IC 74LS08	A205
Data Sep	C017100	IC 74LS193	A204,206
Data Sep	C017511	Shield Insulator Pad	
Data Sep	C017521	DIP Header (40 pin post)	P103
Data Sep	C060607	Diode (1N4148)	CR200 (Alternate listed)
Data Sep	CA017231	PC Board Data Separator	
Disk Drive	FA100197	Disk Drive Assy (Tandon)	
Final	CA014139-02	Atari HCD 810 Disk Drive	(With Tandon Drive)
Final	CA014156-01	Atari HCD 810 Disk Drive	(With Tandon Drive)

ATARI 810T ANALOG DISK DRIVE (TANDON)
PARTS LIST (cont)

Assy	Part No.	Description	Location
Mount	78-74001	Cable-tie	
Mount	C012972	Common Base	
Mount	C017194	Mounting Plate Common	
Mount	CA014160-01	Mounting Plate Assy	(With Tandon Drive Mechanism)
Panel	C014026	Disk Panel Secondary (Tandon Drive)	
Panel	CA014159-01	Panel Assy	Tandon Drive
Side	C014777	Diode LED	CR105,108 (Part of)
Side	C014069	Standoff LED	CR105,108 (Part of)
Side	CA014834	PC Board Side Assy	(Data Sep installed)
Side/Shield	14-5102	Resistor ¼W 1K	R118,121-124,129
Side/Shield	14-5103	Resistor ¼W 10K	R105,109,113,134
Side/Shield	14-5104	Resistor ¼W 100K	R135,136
Side/Shield	14-5151	Resistor ¼W 150 Ohm	R117
Side/Shield	14-5152	Resistor ¼W 1.5K	R114
Side/Shield	14-5153	Resistor ¼W 15K	R108,112
Side/Shield	14-5221	Resistor ¼W 220 Ohm	R103
Side/Shield	14-5224	Resistor ¼W 220K	R127
Side/Shield	14-5271	Resistor ¼W 270 Ohm	R120,126
Side/Shield	14-5273	Resistor ¼W 27K	R131
Side/Shield	14-5331	Resistor ¼W 330 Ohm	R132
Side/Shield	14-5332	Resistor ¼W 3.3K	R115
Side/Shield	14-5333	Resistor ¼W 33K	R111
Side/Shield	14-5393	Resistor ¼W 39K	R104
Side/Shield	14-5471	Resistor ¼W 470 Ohm	R106
Side/Shield	14-5472	Resistor ¼W 4.7K	R110,116,128,133
Side/Shield	14-5473	Resistor ¼W 47K	R119,130
Side/Shield	14-5562	Resistor ¼W 5.6K	R101,102
Side/Shield	14-5750	Resistor ¼W 75 Ohm	R175
Side/Shield	31-1N914	Diode 1N914	CR120,121,122 (Alternate for P/N C060607)
Side/Shield	31-1N4001	Diode 1N4001	CR101-104,106
Side/Shield	CO18991	Transistor 2N3906	Q101,103,104
Side/Shield	34-2N3904	Transistor 2N3904	Q102,105,110,111
Side/Shield	C010174	Transistor Array	A106
Side/Shield	C010447	Transistor Array 4077	Z104
Side/Shield	C010745	IC MPU 6507	A101
Side/Shield	C010750	IC PIA 6532	A104
Side/Shield	C011299	IC Custom ROM	A102
Side/Shield	C011465-01	HEX CMOS Inverter 4069	Z103
Side/Shield	C014136	RF Shield Inside/Component	
Side/Shield	C014137	RF Shield Outside/Trace	
Side/Shield	C014138	Ground Bracket	
Side/Shield	C014179-02	Cap. Ceramic Axial 47pF (50V)	C101,103,119,131
Side/Shield	C014179-03	Cap. Ceramic Axial 10pF (50V)	C122
Side/Shield	C014179-04	Cap. Ceramic Axial 33pF (50V)	C141
Side/Shield	C014179-07	Cap. Ceramic Axial 62pF (50V)	C105

ATARI 810T ANALOG DISK DRIVE (TANDON)
PARTS LIST (cont)

Assy	Part No.	Description	Location
Side/Shield	C014180-03	Cap. Ceramic Axial 100 pF (50V)	C110,130,139,140
Side/Shield	C014180-07	Cap. Ceramic Axial 470pF (50V)	C106
Side/Shield	C014180-10	Cap. Ceramic Axial 390pF (50V)	C111
Side/Shield	C014181-01	Cap. Ceramic Axial .001uF (25V)	C113,116-118, 123-129,134-138
Side/Shield	C014181-03	Cap. Ceramic Axial .1uF (25V)	C102,104,107-109,114,115,133
Side/Shield	C014316	Crystal 1.000000 Mhz	X101
Side/Shield	C014328	Transistor Array 6810	A103
Side/Shield	C014333	Transistor Array 4011	Z102
Side/Shield	C014334	Transistor Array 4013	Z101,105
Side/Shield	C014369	Cap. Elec Radial 4.7uF (35V)	C132
Side/Shield	C014379	Resistor Network (9 X 4.7K)	R176
Side/Shield	C014384	Inductor Ferrite Bead	L102,103
Side/Shield	C014386-02	Socket IC (14 pin)	XA106,XZ101-105
Side/Shield	C014386-07	Socket IC (24 pin)	XA102,103
Side/Shield	C014386-08	Socket IC (28 pin)	XA101
Side/Shield	C014386-09	Socket IC (40 pin)	XA104
Side/Shield	C014394	Transistor MPS-A06	Q106-109
Side/Shield	C014397-02	Switch Power	S102
Side/Shield	C014702	Inductor Axial 470uH	L101
Side/Shield	C014717-01	Connector (23 pin)	P101
Side/Shield	C014719-02	Connector (5 pin)	J101,102
Side/Shield	C014808-01	Diode Zener 1N5231B (5.1V)	CR107
Side/Shield	C017520	Socket DIP (40 pin)	J103
Side/Shield	C060607	Diode (1N4148)	CR120,121, 122 (Alternate listed)
Side/Shield	CA015325	LED & Standoff Assy	CR105,108
Side/Shield	CA060149	PC Board Side Shield Assy	
Top	C014105	Panel Label Cover	
Top	C014106	Hole Cover Label	
Top	CA014157	Upper Assy	
Drive	FA100193	Write Protect Switch Assy	
Drive	FA100194	SSR Upper Arm Assy	
Drive	FC100195	Track 00 Stop	
Drive	FC100196	Drive Belt	
Drive	FA100197	Disk Drive Assy	

SECTION 9

SERVICE BULLETINS

This section is to be used by you to file the three classifications of service bulletins which are periodically released by the Manager of Technical Support.

The following are brief descriptions of each classification:

FIELD CHANGE ORDER

A Field Change Order describes hardware or software changes to ATARI Computer products and instructs how to implement these changes.

To indicate your **required** action, a Field Change Order is issued as one of the following two categories:

> MANDATORY - This identifies a failure mode which affects reliability and describes a procedure to correct the failure. This procedure must be performed on **all units serviced or repaired.**
>
> AS FAILS - This identifies a failure mode which affects reliability and describes a procedure to correct the failure mode. This procedure must be performed on **on an as fails basis.**

UPGRADE BULLETIN

An Upgrade Bulletin describes product improvements or modifications which the consumer may wish to purchase. These Bulletins allow you to modify the customer's unit to add capabilities which may not have been available when the unit was originally manufactured.

TECH TIP

A Tech Tip is a document of a general nature which transmits routine service or repair information. By communicating methods developed since you attended training classes, Tech Tips aid to continuously improve repair skills and increase knowledge of ATARI Computer Products.

Other times, Tech Tips alert you to units which have been modified and are now standard from ATARI Manufacturing, but are different from many existing units and require different repair techniques.