2023 Advanced PCB Re-Make
For the Atari 800XL
Board Revision 1.1

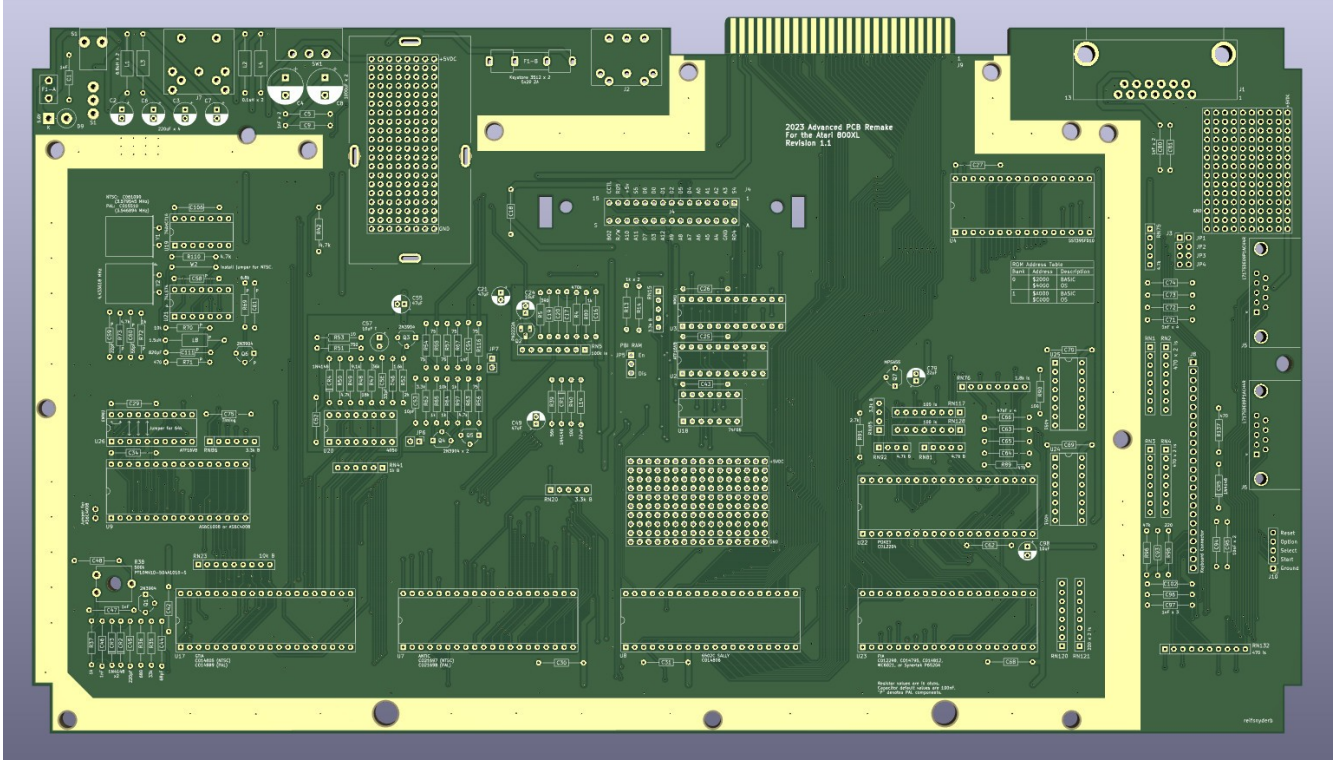

DRAFT DRAFT DRAFT

Manual
Version 0.9

By Brian E. Reifsnyder

Contents:

Non-standard liability notice to satisfy lawyers
Introduction
Assembly
Options
    Jumper Block J3
    Power Supply
    PBI RAM
    RAM Options
    ROM
    Video

Non-standard liability notice to satisfy lawyers:

I, Brian E. Reifsnyder guarantee that I, personally, have assembled a board similar and/or identical to the board described within this manual and it is now a functional Atari 800XL computer. However, I do not guarantee that the board described within this manual will be useful as a computer component, paper weight, lawn ornament, or even a wall hanger. As I have no knowledge of your skills and expertise, I will not guarantee that this board will be functional once you assemble it. By doing anything with this board, you agree that I am not responsible for any bodily and/or property damage due to the assembly, non-assembly, use of, or non-use of this board. If, for example, you assemble this board incorrectly, and it turns into an indoor barbecue grill, I am not responsible for the 4 alarm fire that follows. By even casually glancing at any circuit board that is similar to the board described within this manual, you agree that you assume any and all risk associated with anything that happens or does not happen involving this board and that Brian E. Reifsnyder, his family, pets, friends, neighbors, and even his second cousin's friend's college roommate is not responsible.

Introduction:

Like many projects, this board has considerably evolved. The original intent was to take the Atari 800XL system board (C061851 Revision D) and add some upgrades. The original upgrades were as follows:

1. Chroma video output on monitor port pin 5.
2. +5VDC on PBI pins 47 and 48.
3. /HALT on PBI pin 33.
4. The optional blur capacitor (C56, 180pF) was re-added.
5. An enhanced MMU with the following changes:
    a. Open collector PBI Refresh to prevent ANTIC's Refresh signal from being shorted out due to the actions of some PBI upgrades.
    b. PBI RAM at $D600-$D7FF. (Inspired by Atari's original XL Sweet 16 design document.)
    c. ROM access on read only.
6. Improved DB-9 joystick ports.
7. Full copper ground planes on both sides.
8. Isolated audio and isolated video ground planes.

After some discussion, on the Atari Age forums, many additional changes were made. These include:

1. Reduced the component count by making the following changes:
    a. Replaced all DRAM circuits with SRAM circuits.
    b. Replaced the OS and BASIC ROMs with a single chip.
    c. Combine the functions of the 74LS138 and memory control into a single PLC.
    d. Eliminate the ferrite beads and unnecessary 1nF capacitors.
    e. Simplify the power circuitry.
    f. Replace many resistors with resistor arrays and networks.
    g. Replace the audio circuit with the audio circuit designed by mytek on the AtariAge forums.
    h. Remove the RF video in favor of composite and S-Video.
    i. Use the simplified clock circuit used by mytek on the AtariAge forums.
2. Multiple memory options that include 64k only, 128k XE, and 320k RAMBO.
3. Addition of the jumpers as per Atari's original XL Sweet 16 design document. (These are optional.)
4. Addition of three breadboard regions for user customization.
5. Channel select switch has been re-purposed as a ROM bank select switch to permit two possible OS/BASIC configurations.
6. Addition of separate pads for console keys.
7. Most components have values and/or part numbers on the board to aid in assembly and troubleshooting.
8. Addition of two locations for a fuse and a zener diode to protect against power supplies going over-voltage. (This is experimental.)

Assembly:

Silkscreen Errors:

R64 is marked incorrectly as both 10k ohms and 1k ohms. R64 is 10k ohms.
RN75 should be marked as a Bussed resistor network.

Options:

Jumper Block J3:

This jumper block has jumpers labeled JP1 through JP4 and is completely optional. All four jumpers can be permanently solder jumpered and RN75 omitted.

Note: On board Revision 1.1, RN75 doesn't specify which type of resistor network is to be installed. RN75 is a bussed resistor network.

These jumpers were added as Atari's document titled "Sweet16 Operating System External Reference Specification", page 14, describes four option jumpers as follows:

> Option jumpers – There are four option jumpers provided in the hardware. The operating system shall read the states of these jumpers during power-on and store the states in data base variable JMPERS in location 030E. The bit assignments are shown below:

Bit	Function	Hardware name
0	0 = power-on self-test enable	J1 (pot 4).
1	unassigned	J2 (pot 5).
2	unassigned	J3 (pot 6).
3	unassigned	J4 (pot 7).
4-7	unused	N/A.

In the two versions of the 1200XL operating system, Atari had support for J1. The 600XL and 800XL still have the jumper for J1 but support has been removed from the OS. Even so, in most XL OS revisions, Atari retained the JMPERS variable at location $030E.

This board supports these four jumpers both because these jumpers were specified within the Sweet16 specification and in the event an operating system is modified to support these jumpers.

Power Supply:

The power supply section of the board has been divided into three sections:

1. Protection

2. Digital power supply
3. Audio/Video power supply

The goal is to keep any fluctuations in the digital circuitry isolated from the audio/video circuitry. The audio and video circuits each have their own 47uF capacitor as well.

In an attempt to protect the computer against any power supply failures that result in an over-voltage condition, a 5.6v zener diode (D9) can be installed. There are also two locations for the installation of a fuse. These are F1-A and F1-B. Only one fuse location should be used and a 2 amp fuse is recommended. The theory of operation is that in an over-voltage condition, the 5.6v zener diode will start conducting to ground. This should blow the fuse and/or power supply so as to protect the computer.

PBI RAM:

The 1400XL and 1400XLD provided 512 bytes of RAM at $D600-$D7FF for dedicated PBI device use. This feature can be enabled or disabled by setting jumper JP5, labeled "PBI RAM". If you are installing either a U1MB or VBXE, this featured should be disabled.

RAM Options:

64k Only:

U9: Install AS6C1008.
U26: Do not install. Install 4 jumpers as per arrows on board.
C75: Not needed.
RN86: Not required.

128k as 130XE configuration:

U9: Install AS6C1008.
U26: Program and install ATF16V8 as the EMMU.
C75: Install a ??? timing capacitor.
RN86: Install 3.3k ohm bussed resistor SIP.

320k as 64k base and 256k RAMBO:

U9: Install AS6C4008.
U26: Program and install ATF16V8 as the EMMU.
C75: Not required.
RN86: Install 3.3k ohm bussed resistor SIP.
Install jumper to the left of U9.

Note that other configurations are possible by re-programming U26.

ROM:

This board is designed for a SST39SF010 flash ROM.
At least one OS is required on the ROM.
BASIC is normally on the ROM but it is possible to omit BASIC or even install other firmware in the 8k BASIC region.
Two OS/BASIC banks are possible on the flash ROM.

The OS and BASIC are installed offset to the following addresses on the flash ROM:

Bank: 0	BASIC	$2000
	OS	$4000
Bank: 1	BASIC	$A000
	OS	$C000

The channel select switch (SW1) has been re-purposed for use as a bank select switch. Looking from the front of the computer, Bank 0 is selected when the switch is in the left position and Bank 1 is selected when the switch is in the right position.

R42 is the hold-down resistor for the ROM bank selection. In the event that switch SW1 fails, the computer will still be able to operate from ROM Bank 0. If only one ROM bank is desired, switch SW1 can be omitted. In it is desired that switch SW1 is omitted, R42 can be replaced with a jumper.

Video: NTSC or PAL:

All PAL components have a “P” silk screened on the board. See the schematic diagram for the video circuitry to add for PAL video. For PAL video, do not install jumper W2.

Schematic Diagrams:

Main:

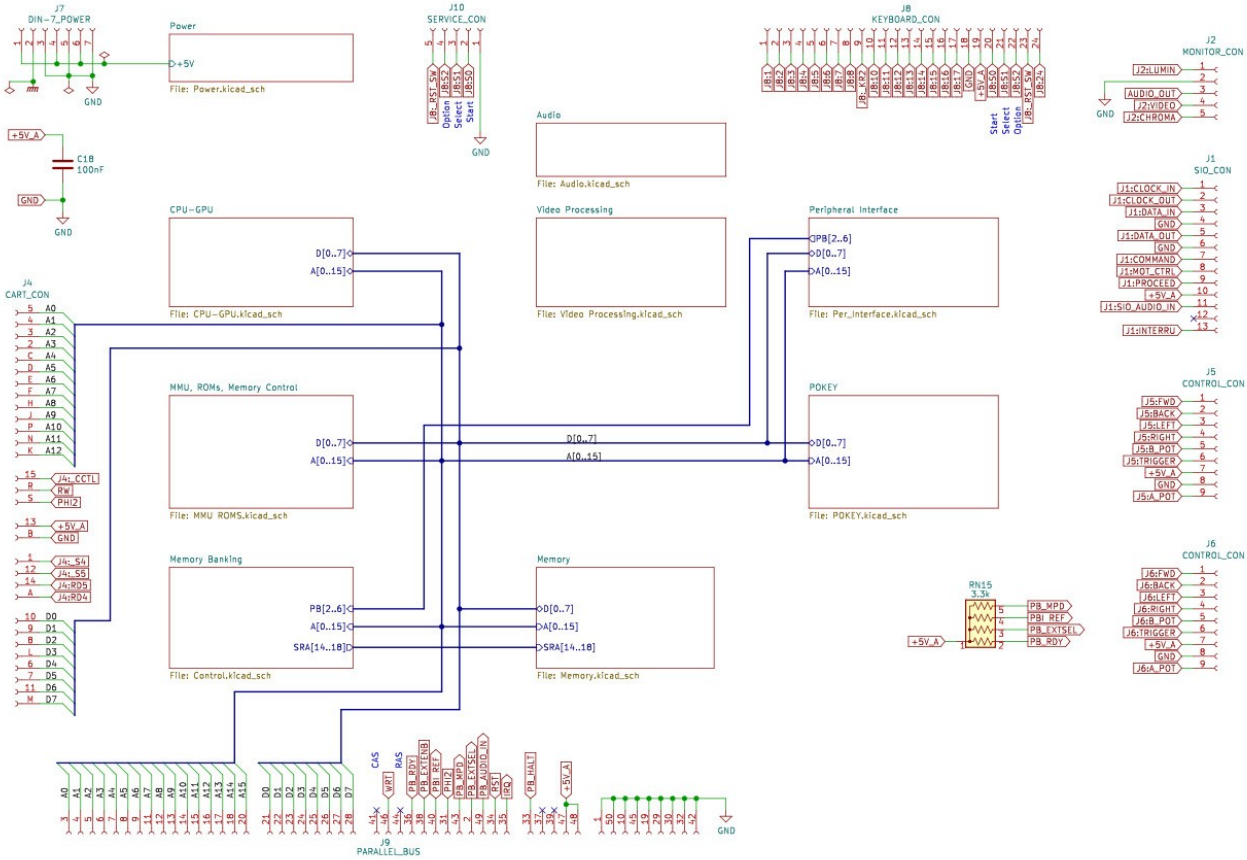

Power Supply:

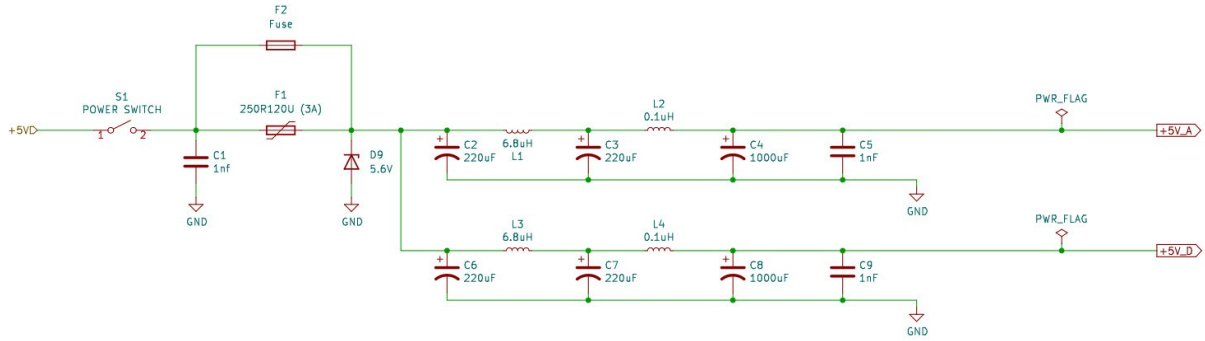

Notes: Only one fuse is to be installed.
F1 is for a poly fuse.
F2 is for a 20mm x 5mm 2 AMP glass cartridge fuse.

CPU, ANTIC, GTIA:

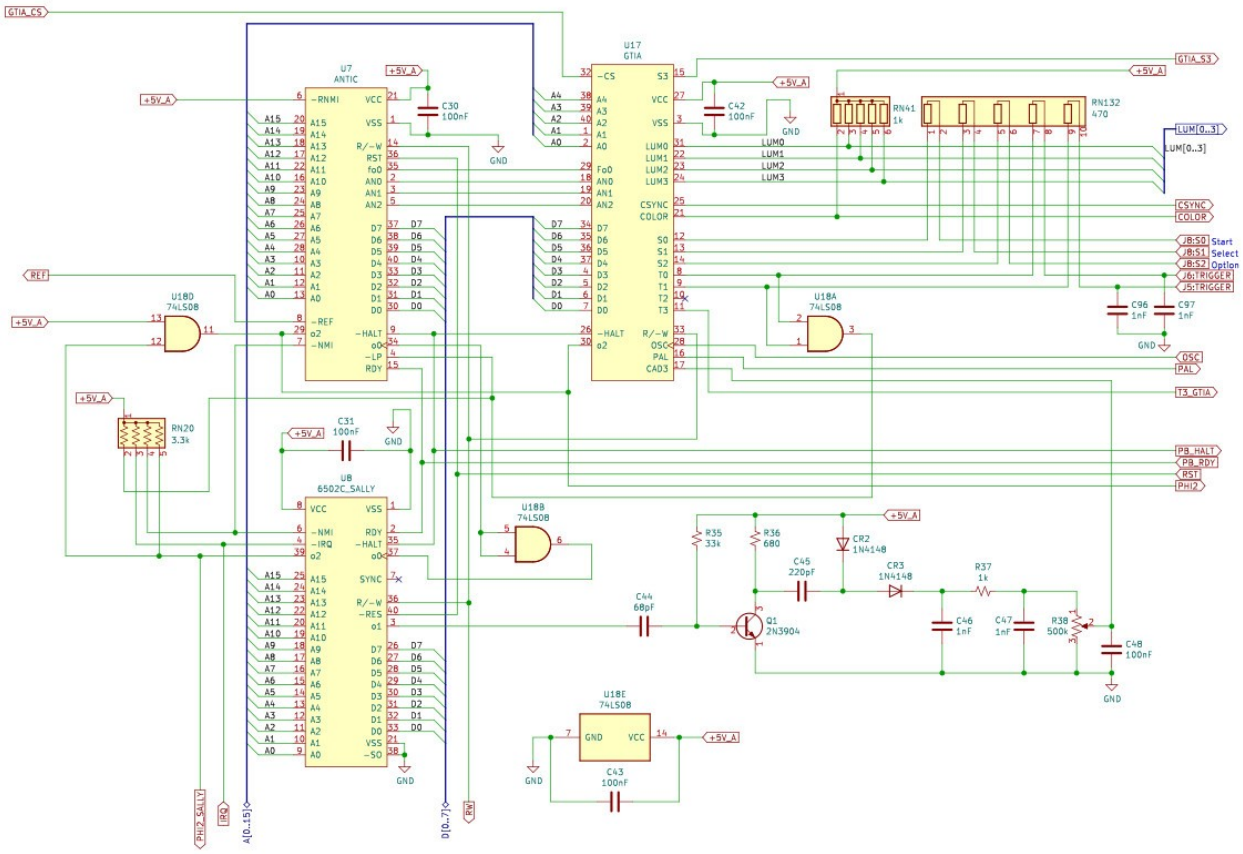

Note: For U18, a 74F08 is recommended.

Memory Control, I/O Control, and ROM:

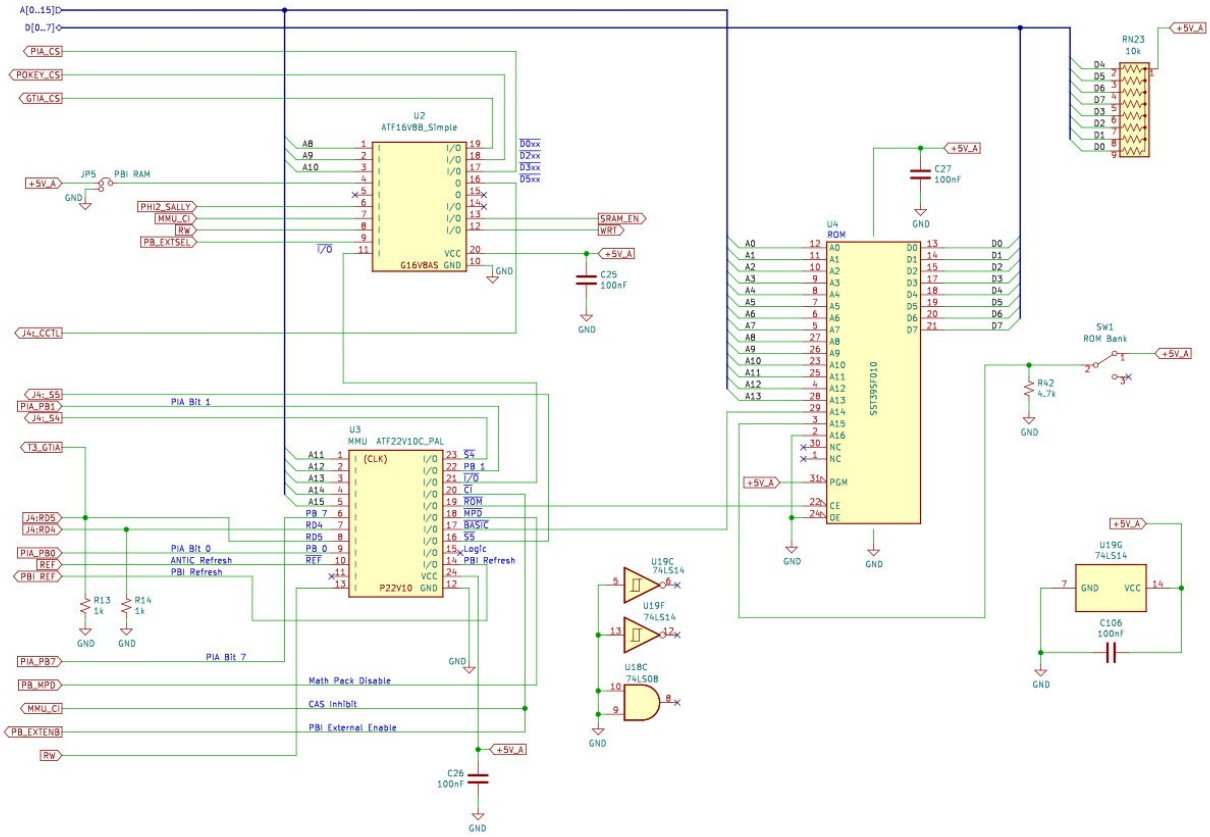

Notes: U19A must be a 74AHCT14.

EMMU:

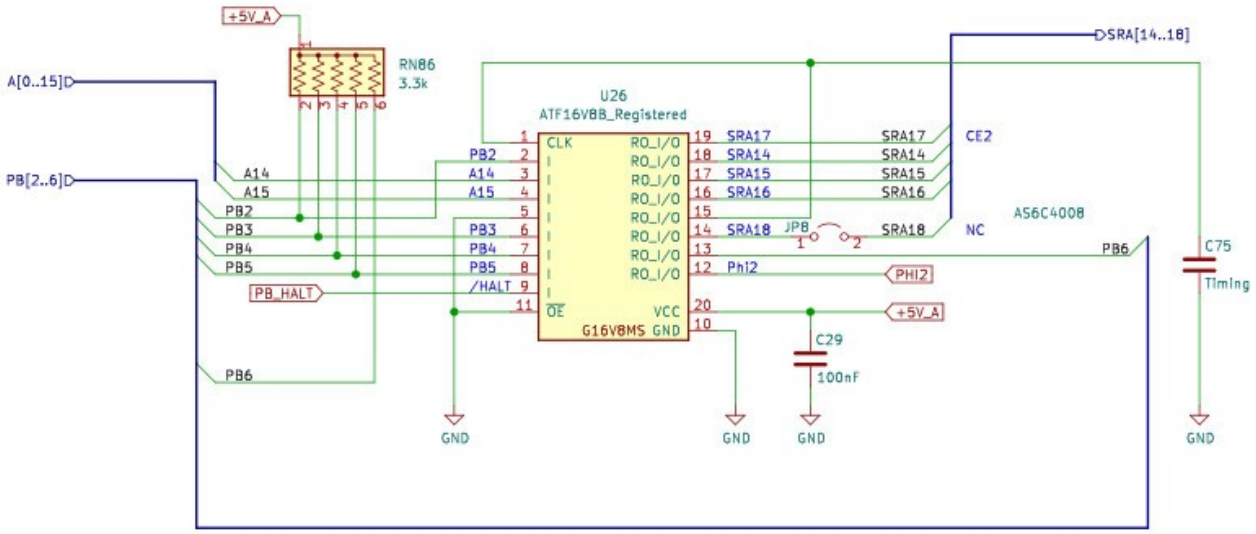

Note: Schematic is shown for a AS6C4008 (512k) SRAM chip. The labels of “CE2” and “NC” are for the AS6C1008 (128k) chip. JP8, on SRA18, is only to be connected if an AS6C4008 is installed.

Memory:

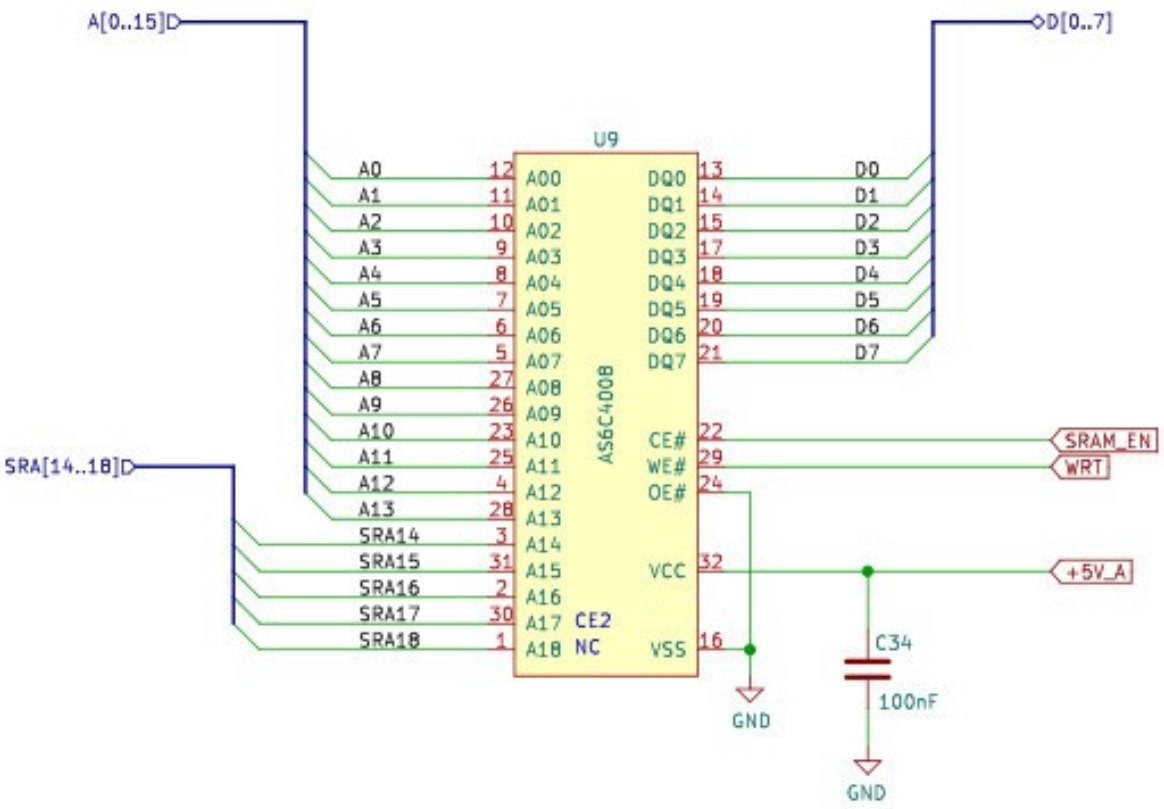

Note: If an AS6C1008 (128k) chip is used, the following pins are different:
Pin 1 – NC
Pin 30 – CE2

PIA and Reset:

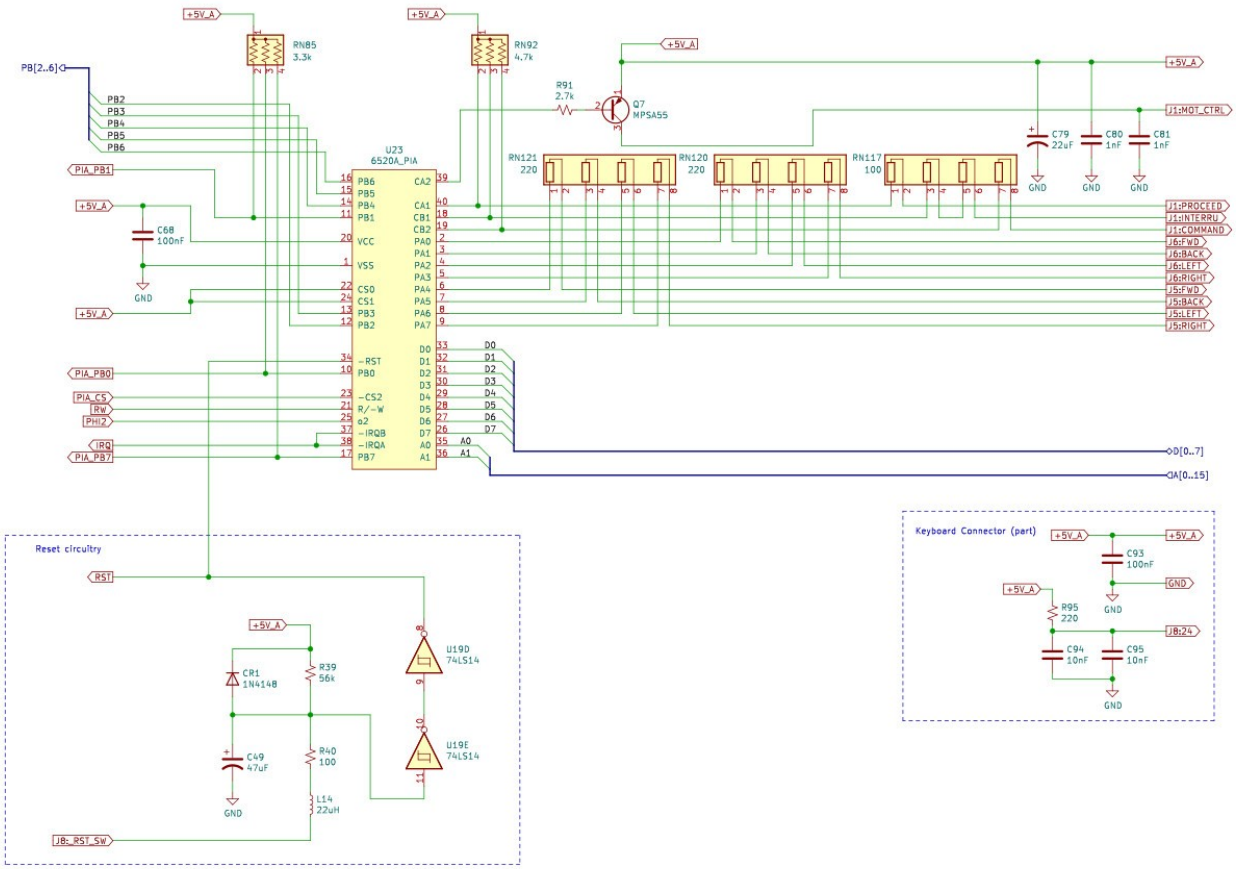

Note: U19A must be a 74AHCT14.

POKEY and Keyboard Scan:

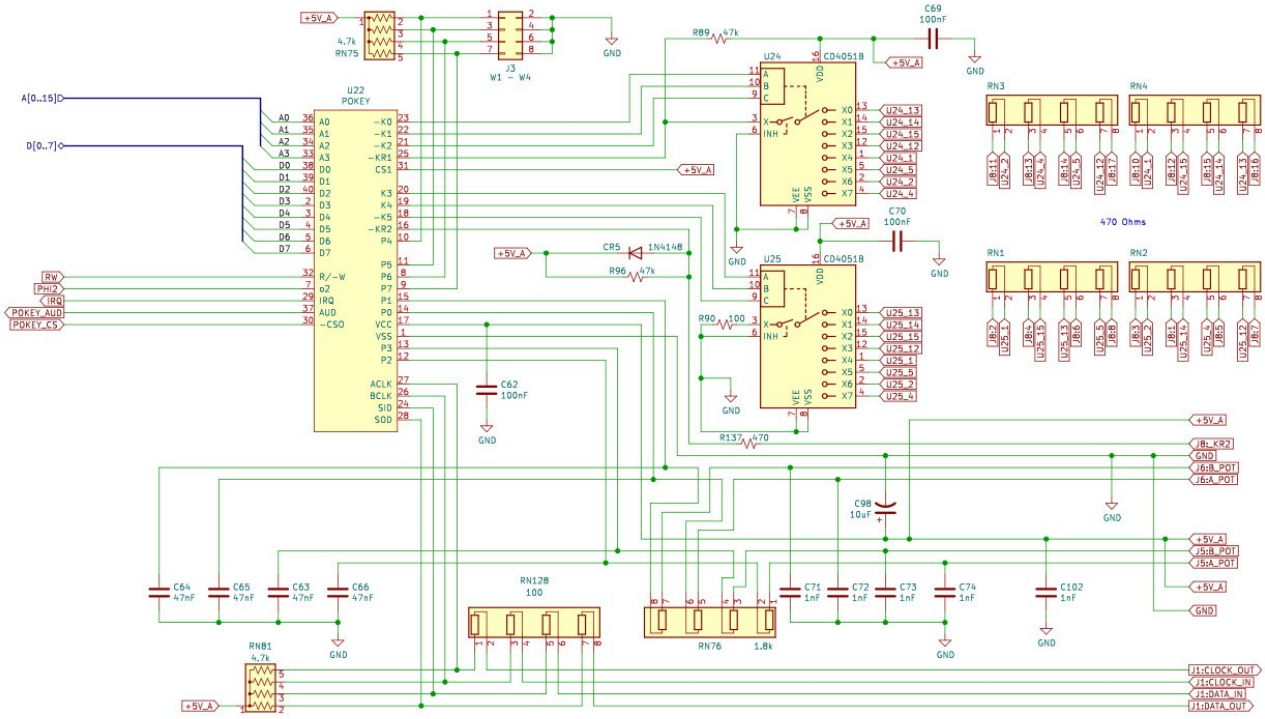

Note: Jumper block J3 is optional. If jumpers aren't going to be used, RN75 can be omitted and all 4 jumpers, on jumper block J3, can have permanent jumper wires soldered in.

Audio:

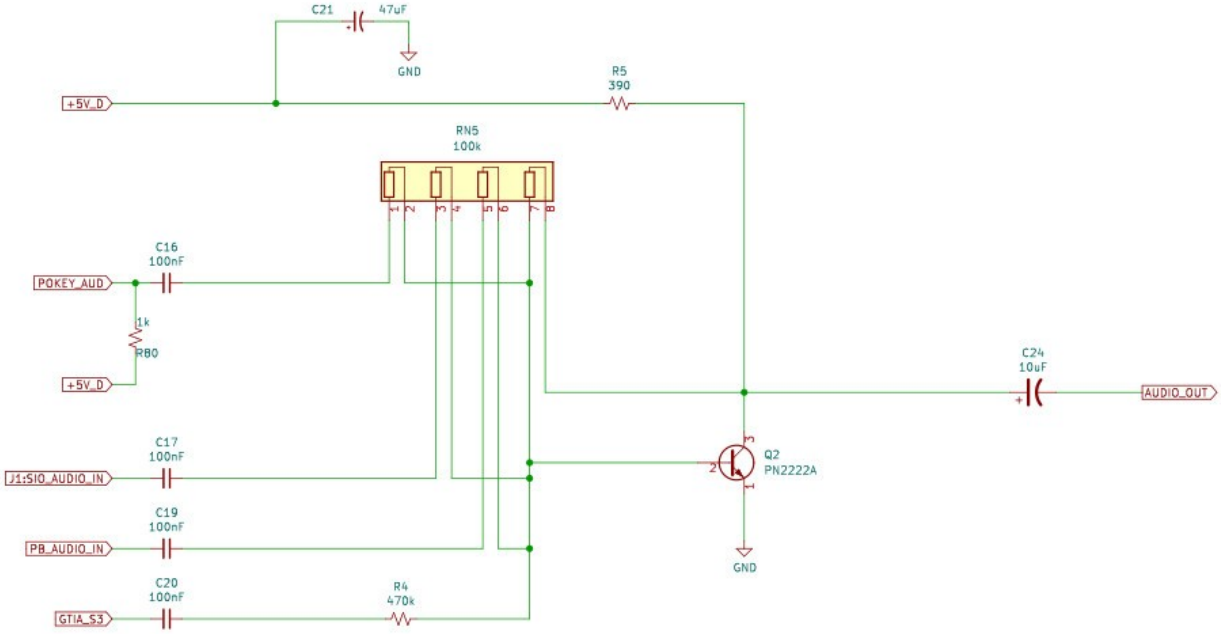

Thank you to MyTek, on the Atari Age Forums, for developing the audio circuit.

Video and Clock:

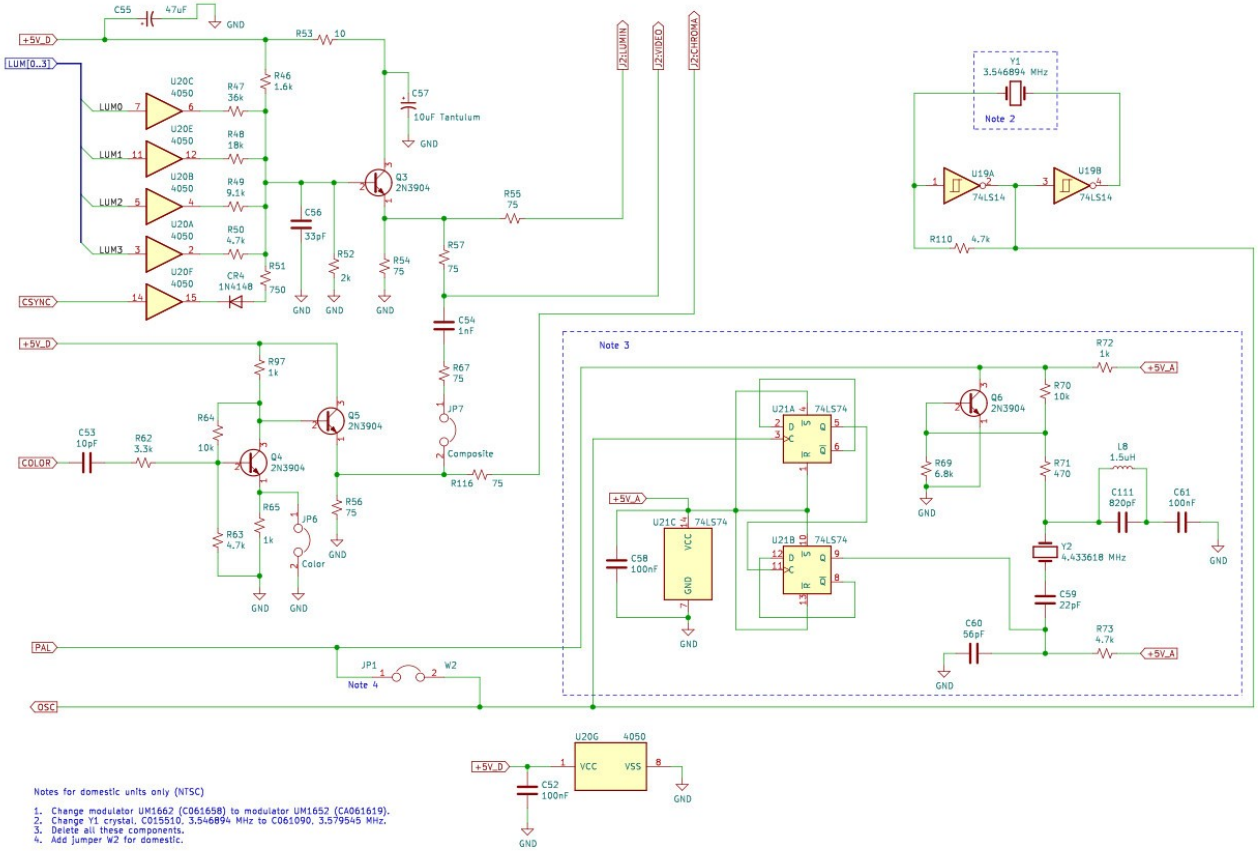

Main clock circuit developed by MyTek, from the Atari Age forums.

Notes: U19A must be a 74AHCT14.
For composite video, install JP6 and JP7.
If composite video is never going to be used, C54, R57, and R67 can be omitted.
C56 is an optional blur capacitor.

Bill of Materials:

J1	SIO	Atari SIO Connector
J2	MONITOR_CON	Monitor Jack
J4	CART_CON	30 Pin Card Edge Conn.
J5,J6	CONTROL_CON	Joystick_Port
J8	KEYBOARD	Atari Keyboard Connector

RN1,RN2,RN3,RN4	SIP8	Resistor Array, Isolated	470 ohms

U7 Socket	DIP-40	W15.24mm_Socket
U8 Socket	DIP-40	W15.24mm Socket
U17 Socket	DIP-40	W15.24mm Socket
U18 Socket	DIP-14	W7.62mm Socket
U20 Socket	DIP-16	W7.62mm_Socket
U21 Socket	DIP-14	W7.62mm Socket
U22 Socket	DIP-40	W15.24mm Socket
U23 Socket	DIP-40	W15.24mm Socket
U24 Socket	DIP-16	W7.62mm_Socket
U25 Socket	DIP-16	W7.62mm_Socket

U7	ANTIC	Atari LSI Chip	CO21697 (NTSC) or CO21698 (PAL)
U8	6502C	Atari 6502C SALLY	C014806
U17	GTIA	Atari LSI Chip	CO14805 (NTSC) or CO14889 (PAL)
U18	74F08	74F08	
U20	4050	CD4050	
U21	74AHCT14	74AHCT14	
U22	POKEY	Atari LSI Chip	C012294
U23	PIA	6520A or equivalent	
U24	CD4051B	CD4051B	
U25	CD4051B	CD4051B	

13;"R46";"Standard_Resistor";1;"1.6k";;;
14;"R47";"Standard_Resistor";1;"36k";;;
15;"R48";"Standard_Resistor";1;"18k";;;
16;"R49";"Standard_Resistor";1;"9.1k";;;

17;"R50,R63,R73,R42,R110";"Standard_Resistor";5;"4.7k";;;
18;"R54,R55,R56,R67,R116,R57";"Standard_Resistor";6;"75";;;
19;"R62";"Standard_Resistor";1;"3.3k";;;
20;"R64,R70";"Standard_Resistor";2;"10k";;;

21;"R69";"Standard_Resistor";1;"6.8k";;;
22;"R71,R137";"Standard_Resistor";2;"470";;;
23;"R72,R13,R14,R37,R97,R65,R80";"Standard_Resistor";7;"1k";;;

25;"R39";"Standard_Resistor";1;"56k";;;
26;"R40,R90";"Standard_Resistor";2;"100";;;
27;"R89,R96";"Standard_Resistor";2;"47k";;;
28;"R91";"Standard_Resistor";1;"2.7k";;;
29;"R95";"Standard_Resistor";1;"220";;;

31;"C62,C69,C70,C68,C93,C48,C25,C26,C30,C31,C42,C43,C58,C61,C18,C52,C29,C17,C20,C16,C19,C106,C34,C27";"Standard_Capacitor";24;"100nF";;;
32;"C63,C64,C65,C66";"Standard_Capacitor";4;"47nF";;;
33;"C71,C72,C73,C74,C102,C81,C46,C47,C80,C54,C97,C96,C9,C5";"Standard_Capacitor";14;"1nF";;;
34;"S1";"Power_Switch";1;"POWER SWITCH";;;
35;"C94,C95";"Standard_Capacitor";2;"10nF";;;
36;"Q1,Q3,Q4,Q5,Q6";"TO-92_Wide";5;"2N3904";;;
37;"C44";"Standard_Capacitor";1;"68pF";;;
38;"C45";"Standard_Capacitor";1;"220pF";;;
39;"R35";"Standard_Resistor";1;"33k";;;
40;"R36";"Standard_Resistor";1;"680";;;
41;"Q7";"TO-92_Wide";1;"MPSA55";;;
42;"Y2";"Crystal_HC49-U_Horizontal";1;"4.433618 MHz";;;
43;"C53";"Standard_Capacitor";1;"10pF";;;
44;"C59";"Standard_Capacitor";1;"22pF";;;
45;"C60";"Standard_Capacitor";1;"56pF";;;
46;"C111";"Standard_Capacitor";1;"820pF";;;

48;"L8";"Standard_Inductor";1;"1.5uH";;;
49;"C98";"CP_Radial_D5.0mm_P2.50mm";1;"10uF";;;
50;"J7";"Power_Jack";1;"DIN-7_POWER";;;
51;"L14";"Short_Inductor";1;"22uH";;;
52;"C79";"CP_Radial_D5.0mm_P2.00mm";1;"22uF";;;
53;"C49,C55,C21";"CP_Radial_D5.0mm_P2.00mm";3;"47uF";;;
54;"CR1,CR2,CR3,CR4,CR5";"Standard_Diode";5;"1N4148";;;
55;"JP1";"Jumper";1;"W2";;;

57;"R38";"Potentiometer_5mm_x_10mm_pads_w_vertical_hole";1;"500k";;;
58;",,,,

64;"R52";"Standard_Resistor";1;"2k";;;
65;"R51";"Standard_Resistor";1;"750";;;
66;"RN75,RN81";"R_Array_SIP5";2;"4.7k";;;
67;"REF**";"RF_Modulator wo pads";1;"RF_Modulator wo pads";;;
68;"RN20,RN15";"R_Array_SIP5";2;"3.3k";;;
69;"U4";"DIP-32_W15.24mm_Socket";1;"SST39SF010";;;
70;"RN23";"R_Array_SIP9";1;"10k";;;
71;"C1";"Standard_Capacitor";1;"1nf";;;
72;"C75";"Standard_Capacitor";1;"Timing";;;
73;"R4";"Standard_Resistor";1;"470k";;;
74;"RN128,RN117";"R_Array_SIP8";2;"100";;;
75;"RN132";"R_Array_SIP10";1;"470";;;
76;"J3";"PinHeader_2x04_P2.54mm_Vertical";1;"W1 - W4";;;
77;"C56";"Standard_Capacitor";1;"33pF";;;
78;"J10";"PinHeader_1x05_P2.54mm_Vertical";1;"SERVICE_CON";;;
79;"L4,L2";"Standard_Inductor";2;"0.1uH";;;
80;"U26";"DIP-20_W7.62mm_Socket";1;"ATF16V8B_Registered";;;
81;"RN92";"R_Array_SIP4";1;"4.7k";;;
82;"U9";"DIP-32_W15.24mm_Socket";1;"AS6C4008";;;
83;"JP7";"PinHeader_1x02_P2.54mm_Vertical";1;"Composite";;;
84;"L3,L1";"Standard_Inductor";2;"6.8uH";;;
85;"R5";"Standard_Resistor";1;"390";;;
86;"U2";"DIP-20_W7.62mm_Socket";1;"ATF16V8B_Simple";;;
87;"C57";"CP_Radial_Tantal_D5.0mm_P2.50mm";1;"10uF Tantulum";;;
88;"C4,C8";"CP_Radial_D10.0mm_P5.00mm";2;"1000uF";;;
89;"SW1";"RF_Switch";1;"ROM Bank";;;
90;"RN120,RN121";"R_Array_SIP8";2;"220";;;
91;"JP6";"PinHeader_1x02_P2.54mm_Vertical";1;"Color";;;
92;"F1";"Polyfuse 250R120";1;"250R120U (3A)";;;
93;"Q2";"TO-92_HandSolder";1;"PN2222A";;;
94;"RN85";"R_Array_SIP4";1;"3.3k";;;
95;"RN76";"R_Array_SIP8";1;"1.8k";;;
96;"U19";"DIP-14_W7.62mm_Socket";1;"74LS14";;;
97;"D9";"D_DO-201AD_P5.08mm_Vertical_KathodeUp";1;"5.6V";;;
98;"R53";"Standard_Resistor";1;"10";;;
99;"U3";"DIP-24_W7.62mm_Socket";1;"MMU ATF22V10C_PAL";;;
100;"RN41";"R_Array_SIP6";1;"1k";;;
101;"Y1";"Crystal_HC49-U_Horizontal";1;"3.546894 MHz";;;
102;"JP8";"Jumper Short";1;"AS6C4008";;;
103;"F2";"Fuseholder_Clip-
5x20mm_Keystone_3512_Inline_P23.62x7.27mm_D1.02x1.57mm_Horizontal";1;"Fuse";;;

WinCupl Code for Programmable Logic Chips:

U3/MMU

```
Name       800XL 2023 Advanced PCB Remake;
Partno     NA;
Date       11/03/2023;
Revision   00;
Designer   Bob Woolley;
Company    N/A;
Assembly   2023 Advanced PCB Remake - For the Atari 800XL;
Location   U3;
Device     p22v10;

/*******************************************************************/
/*    800XL 2023 Advanced PCB Remake                               */
/*    Memory Management Unit (MMU)                                 */
/*    Modified from MMU code by Bob Woolley                        */
/*******************************************************************/
/*  Allowable Target Device Types: ATF22V10                  */
/*******************************************************************/

/**  Inputs  **/

Pin  01     = A11                ; /* address bit 11                  */
Pin  02     = A12                ; /* address bit 12                  */
Pin  03     = A13                ; /* address bit 13                  */
Pin  04     = A14                ; /* address bit 14                  */
Pin  05     = A15                ; /* address bit 15                  */
Pin  06     = MAP                ; /* !PB7 diagnostic bit             */
Pin  07     = RD4                ; /* right cart. @ $8000-$9FFF       */
Pin  08     = RD5                ; /* left cart. @ $A000-$BFFF        */
Pin  09     = REN                ; /* PB0 OS ram enable               */
Pin  10     = REF_ANTIC          ; /* ANTIC Refresh                   */
Pin  13     = RW                 ; /* Read/Write                      */
Pin  18     = MPD                ; /* !Math Pack Disable              */
Pin  22     = BE                 ; /* !Basic Enable                   */


/**  Outputs  **/

Pin  16     = !S5                ; /* left cart. select               */
Pin  17     = !BASIC             ; /* BASIC when low, OS w/hi         */
Pin  19     = !ROM               ; /* ROM CE                          */
Pin  20     = !CI                ; /* DRAM CAS inhibit                */
Pin  21     = !IO                ; /* I/O select @ $D000-$D7FF        */
Pin  23     = !S4                ; /* right cart. select              */

/**  Input/Output **/
Pin  14     = REF                ; /* PBI Refresh                 */

/**  Logic  **/
Pin  15     = !OS                ; /* Macrocell for OS Logic      */
```

```
/**  Logic Equations  **/
/**  # is or **/
/**  ! is not **/

S4     = !A13 & !A14 & A15 & RD4 & REF;                          /* RD4 and addresses $8000-$9FFF */
S5     = A13 & !A14 & A15 & RD5 & REF;                           /* RD5 and addresses $A000-$BFFF */

IO     = A12 & !A11 & !A13 & A14 & A15 & REF;                    /* addresses $D000-$D7FF*/

CI     = !A13 & !A14 & A15 & RD4 & REF                           /* right cart. */
       # A13 & !A14 & A15 & RD5 & REF                            /* left cart. */
       # A13 & !BE & !A14 & A15 & !RD5 & REF                     /* BE and $A000-$BFFF */
       # OS                                                      /* OS addresses */
       # A12 & !A11 & !A13 & A14 & A15 & REF                     /* I/O addresses */
       # !REF;                                                   /* memory refresh */

OS     = A13 & A14 & A15 & REN & REF                             /* addresses $E000-$FFFF */
       # !A12 & !A13 & A14 & A15 & REN & REF                     /* addresses $C000-$CFFF */
       # A12 & A11 & !A13 & A14 & A15 & MPD & REN & REF          /* addresses $D800-$DFFF */
       # A12 & !A11 & !A13 & A14 & !A15 & !MAP & REN & REF;      /* addresses $5000-$5800 - mapped */

ROM      = OS & RW                                               /* ROM CE on Read Only */
         # BASIC & RW;

BASIC    = A13 & !BE & !A14 & A15 & !RD5 & REF;                  /* BE and $A000-$BFFF */

REF      = REF_ANTIC;                                            /* Simulated open collector PBI Refresh */
REF.oe   = !REF_ANTIC;
```

U2

```
Name       800XL 2023 Advanced PCB Remake;
Partno     NA;
Date       11/22/2023;
Revision   00;
Designer   Brian Reifsnyder;
Company    N/A;
Assembly   2023 Advanced PCB Remake - For the Atari 800XL;
Location   U2;
Device     g16v8as;

/*******************************************************************/
/*    800XL 2023 Advanced PCB Remake                               */
/*    I/O and SRAM control                                         */
/*                                                                 */
/*******************************************************************/
/*  Allowable Target Device Types: ATF16V8                    */
/*******************************************************************/

/**  Inputs  **/
```

```
Pin  01   = A8          ;  /* A8                                  */
Pin  02   = A9          ;  /* A9                                  */
Pin  03   = A10         ;  /* A10                                 */
Pin  04   = PBI_RAM     ;  /* Enable PBI RAM      (D6xx-D7FF)     */
Pin  06   = Phi2S       ;  /* Phi2 Sally                          */
Pin  07   = MMU_CI      ;  /* !MMU CAS Inhibit                    */
Pin  08   = RW          ;  /* RW From Sally                       */
Pin  09   = PB_EXTSEL   ;  /* !EXTSEL                             */
Pin  11   = IO          ;  /* !IO                                 */


/**  Outputs  **/
Pin  12   = WRT         ;  /* !Write                              */
Pin  13   = SRAM_CE     ;  /* !SRAM CE                            */
Pin  16   = D5xx        ;  /* !Cartridge Control                  */
Pin  17   = D3xx        ;  /* !PIA CE                             */
Pin  18   = D2xx        ;  /* !POKEY CE                           */
Pin  19   = D0xx        ;  /* !GTIA CE                            */


/**  Logic Equations  **/
/**  # is or **/
/**  ! is not **/

!WRT        =    !RW;                                          /* RW        */

!SRAM_CE    =    MMU_CI &  PB_EXTSEL & Phi2S #                 /* RAM       */
                 !IO & A10 & A9 & PB_EXTSEL & Phi2S & PBI_RAM; /* PBI RAM   */

!D5xx       =    !IO & A10 & !A9 & A8;                         /* CCTL      */

!D3xx       =    !IO & !A10 & A9 & A8;                         /* PIA       */

!D2xx       =    !IO & !A10 & A9 & !A8;                        /* POKEY     */

!D0xx       =    !IO  & !A10 & !A9 & !A8;                      /* GTIA      */
```

U26/EMMU

16k Configuration:

```
Name 800XL 2023 Advanced PCB Remake;
Partno NA;
Date 11/22/2023;
Revision 00;
Designer Brian Reifsnyder;
Company N/A;
Assembly 2023 Advanced PCB Remake - For the Atari 800XL;
Location U26;
Device g16v8ms;

/*********************************************************************/
/* 800XL 2023 Advanced PCB Remake                                    */
/* EMMU - 16k Configuration                                          */
```

```
/*                                                                    */
/*******************************************************************/
/* Allowable Target Device Types: ATF16V8                            */
/*******************************************************************/

/** Inputs **/
Pin 02 = PB2;          /* PORTB-2 */
Pin 03 = A14;          /* A14 */
Pin 04 = A15;          /* A15 */
Pin 05 = GND;          /* Ground */
Pin 06 = PB3;          /* PORTB-3 */
Pin 07 = PB4;          /* PORTB-4 */
Pin 08 = PB5;          /* PORTB-5 */
Pin 09 = HALT;         /* !HALT */
Pin 12 = Phi2;         /* Phi2 */
Pin 13 = PB6;          /* PORTB-6 */

/** Outputs **/
Pin 15 = Pulse;        /* Clock pulse for /HALT latch. */
Pin 16 = SRA16;        /* SRAM A16 */
Pin 17 = SRA15;        /* SRAM A15 */
Pin 18 = SRA14;        /* SRAM A14 */
Pin 19 = CE2;          /* SRAM CE2 */

/** Latch **/
Pin 14 = HALTL;        /* !HALT Latch */


/** Logic Equations **/

/** # is or **/
/** ! is not **/

CE2 = !A14 & !A15;     /* Set CE2 high only when !A14 and !A15. */

SRA14 = A14;

SRA15 = A15;

SRA16 = GND;
```

64k configuration:

```
Name 800XL 2023 Advanced PCB Remake;
Partno NA;
Date 11/22/2023;
Revision 00;
Designer Brian Reifsnyder;
Company N/A;
Assembly 2023 Advanced PCB Remake - For the Atari 800XL;
Location U26;
Device g16v8ms;

/*******************************************************************/
```

```
/* 800XL 2023 Advanced PCB Remake                                    */
/* EMMU - 64k Configuration                                          */
/*                                                                   */
/*******************************************************************/
/* Allowable Target Device Types: ATF16V8                            */
/*******************************************************************/

/** Inputs **/
Pin 02 = PB2;           /* PORTB-2 */
Pin 03 = A14;           /* A14 */
Pin 04 = A15;           /* A15 */
Pin 05 = GND;           /* Ground */
Pin 06 = PB3;           /* PORTB-3 */
Pin 07 = PB4;           /* PORTB-4 */
Pin 08 = PB5;           /* PORTB-5 */
Pin 09 = HALT;          /* !HALT */
Pin 12 = Phi2;          /* Phi2 */
Pin 13 = PB6;           /* PORTB-6 */

/** Outputs **/
Pin 15 = Pulse;         /* Clock pulse for /HALT latch. */
Pin 16 = SRA16;         /* SRAM A16 */
Pin 17 = SRA15;         /* SRAM A15 */
Pin 18 = SRA14;         /* SRAM A14 */
Pin 19 = CE2;           /* SRAM CE2 */

/** Latch **/
Pin 14 = HALTL;         /* !HALT Latch */


/** Logic Equations **/

/** # is or **/
/** ! is not **/

CE2 = !GND;             /* Set CE2 high. */

SRA14 = A14;

SRA15 = A15;

SRA16 = GND;

Pulse = GND;
```

128k Configuration:

```
Name 800XL 2023 Advanced PCB Remake;
Partno NA;
Date 11/22/2023;
Revision 00;
Designer Brian Reifsnyder;
Company N/A;
```

```
Assembly 2023 Advanced PCB Remake - For the Atari 800XL;
Location U26;
Device g16v8ms;

/*******************************************************************/
/* 800XL 2023 Advanced PCB Remake                                  */
/* EMMU - 128k Configuration                                       */
/*                                                                 */
/*******************************************************************/
/* Allowable Target Device Types: ATF16V8                          */
/*******************************************************************/

/** Inputs **/
Pin 02 = PB2;           /* PORTB-2 */
Pin 03 = A14;           /* A14 */
Pin 04 = A15;           /* A15 */
Pin 05 = GND;           /* Ground */
Pin 06 = PB3;           /* PORTB-3 */
Pin 07 = PB4;           /* PORTB-4 */
Pin 08 = PB5;           /* PORTB-5 */
Pin 09 = HALT;          /* !HALT */
Pin 12 = Phi2;          /* Phi2 */
Pin 13 = PB6;           /* PORTB-6 */

/** Outputs **/
Pin 15 = Pulse;         /* Clock pulse for /HALT latch. */
Pin 16 = SRA16;         /* SRAM A16 */
Pin 17 = SRA15;         /* SRAM A15 */
Pin 18 = SRA14;         /* SRAM A14 */
Pin 19 = CE2;           /* SRAM CE2 */

/** Latch **/
Pin 14 = HALTL;         /* !HALT Latch */


/** Logic Equations **/

/** # is or **/
/** ! is not **/

CE2 = !GND;             /* Set CE2 high. */

SRA14 = A14 & A15 #                     /* = A14 in C000-FFFF */
        A14 & !A15 & PB4 & PB5 #        /* = A14 in 4000-7FFF when banking is off */
        A14 & !A15 & !PB4 & PB2;        /* = PB2 in 4000-7FFF when CPU banking */

SRA15 = A14 & A15 #                     /* = A15 in C000-FFFF */
        !A14 & A15 #                    /* = A15 in 8000-BFFF */
        A14 & !A15 & !PB4 & PB3;        /* = PB3 in 4000-7FFF when CPU banking */

SRA16 = A14 & !A15 & !PB4;              /* Use banked RAM when 4000-7FFF and CPU banking */
```

128k as with ANTIC banking (130XE) configuration:

```
Name 800XL 2023 Advanced PCB Remake;
Partno NA;
Date 11/22/2023;
Revision 00;
Designer Brian Reifsnyder;
Company N/A;
Assembly 2023 Advanced PCB Remake - For the Atari 800XL;
Location U26;
Device g16v8ms;

/*******************************************************************/
/* 800XL 2023 Advanced PCB Remake                                  */
/* EMMU - 130XE Configuration                                      */
/*                                                                 */
/*******************************************************************/
/* Allowable Target Device Types: ATF16V8                          */
/*******************************************************************/

/** Inputs **/
Pin 02 = PB2;           /* PORTB-2 */
Pin 03 = A14;           /* A14 */
Pin 04 = A15;           /* A15 */
Pin 05 = GND;           /* Ground */
Pin 06 = PB3;           /* PORTB-3 */
Pin 07 = PB4;           /* PORTB-4 */
Pin 08 = PB5;           /* PORTB-5 */
Pin 09 = HALT;          /* !HALT */
Pin 12 = Phi2;          /* Phi2 */
Pin 13 = PB6;           /* PORTB-6 */

/** Outputs **/
Pin 15 = Pulse;         /* Clock pulse for /HALT latch. */
Pin 16 = SRA16;         /* SRAM A16 */
Pin 17 = SRA15;         /* SRAM A15 */
Pin 18 = SRA14;         /* SRAM A14 */
Pin 19 = CE2;           /* SRAM CE2 */

/** Latch **/
Pin 14 = HALTL;         /* !HALT Latch */


/** Logic Equations **/

/** # is or **/
/** ! is not **/

CE2 = !GND; /* Set CE2 high. */

SRA14 = A14 & A15 #                 /* = A14 in C000-FFFF */
        A14 & !A15 & !SRA16 #       /* = A14 in 4000-7FFF when banking is off */
        A14 & !A15 & SRA16 & PB2;   /* = PB2 in 4000-7FFF when banking */

SRA15 = A14 & A15 #                 /* = A15 in C000-FFFF */
        !A14 & A15 #                /* = A15 in 8000-BFFF */
        A14 & !A15 & SRA16 & PB3;   /* = PB3 in 4000-7FFF when banking */
```

```
SRA16 = A14 & !A15 & !PB4 & HALTL #          /* Use banked RAM when 4000-7FFF and CPU banking */
        A14 & !A15 & !PB5 & !HALTL;          /* Use banked RAM when 4000-7FFF and ANTIC banking */

Pulse = !Phi2;                          /* Clock pulse to set HALTL latch (will have delay with timing cap) */

HALTL.d = HALT;                         /* Use SRA18 for HALTL as pin is NC for AS6C1008 */
```

320k as 64k base and 256k RAMBO:

Note: Untested at this time.

```
Name 800XL 2023 Advanced PCB Remake;
Partno NA;
Date 11/22/2023;
Revision 00;
Designer Brian Reifsnyder;
Company N/A;
Assembly 2023 Advanced PCB Remake - For the Atari 800XL;
Location U26;
Device g16v8ms;

/*************************************************************************/
/* 800XL 2023 Advanced PCB Remake                                        */
/* EMMU - 320k Configuration                                             */
/*                                                                       */
/*************************************************************************/
/* Allowable Target Device Types: ATF16V8                                */
/*************************************************************************/

/** Inputs **/
Pin 02 = PB2;           /* PORTB-2 */
Pin 03 = A14;           /* A14 */
Pin 04 = A15;           /* A15 */
Pin 05 = GND;           /* Ground */
Pin 06 = PB3;           /* PORTB-3 */
Pin 07 = PB4;           /* PORTB-4 */
Pin 08 = PB5;           /* PORTB-5 */
Pin 09 = HALT;          /* !HALT */
Pin 12 = Phi2;          /* Phi2 */
Pin 13 = PB6;           /* PORTB-6 */

/** Outputs **/
Pin 14 = SRA18;         /* SRAM A18 */
Pin 15 = Pulse;         /* Clock pulse for /HALT latch. */
Pin 16 = SRA16;         /* SRAM A16 */
Pin 17 = SRA15;         /* SRAM A15 */
Pin 18 = SRA14;         /* SRAM A14 */
Pin 19 = SRA17;         /* SRAM A17 */

/** Latch **/

/** Logic Equations **/
```

```
/** # is or **/
/** ! is not **/

CE2 = !GND; /* Set CE2 high. */

SRA14 = A14 & A15 #                    /* = A14 in C000-FFFF */
        A14 & !A15 & PB4 & PB5 #       /* = A14 in 4000-7FFF when banking is off */
        A14 & !A15 & !PB4 & PB2;       /* = PB2 in 4000-7FFF when CPU banking */

SRA15 = A14 & A15 #                    /* = A15 in C000-FFFF */
        !A14 & A15 #                   /* = A15 in 8000-BFFF */
        A14 & !A15 & !PB4 & PB3;       /* = PB3 in 4000-7FFF when CPU banking */

SRA16 = A14 & !A15 & !PB4;             /* Use banked RAM when 4000-7FFF and CPU banking */

SRA17 = A14 & !A15 & !PB4 & PB5;

SRA18 = A14 & !A15 & !PB4 & PB6;
```