838-IDE Version 3
Peripheral Expansion Card

Last Updated: December 7, 2023

Table of Contents

Summary 4
Features 4
Requirements 4
TI-99/4A 4
Myarc Geneve 9640 4
Software 5
Recommendations 5
Get to know your IDE card 6
Clock Module 6
Connectors 6
Enable/Disable Switch 7
System Select Switch 7
CRU Select 7
PCB Assembly 7
Verify and Smoke Test of IDE board 8
Verify Power Readings 8
Smoke Test 9
IDE Card Setup 9
Set CRU 9
Choose Storage Media 10
DSR Loading 10
Drive Setup 11
Partitioning 11
Booting from IDE1 with Myarc Geneve 9640 12
Example AUTOEXEC file 13
SCSREMAP & ASSIGN Device explanation 13
Known Issues 13
Links 14
Support 14

Summary

The 838-IDE Version 3 peripheral expansion card is a hard disk controller for IDE hard drives to be used on the Texas Instruments TI-99/4A, TI-99/8 and Myarc Geneve 9640 home computers for an alternate mass storage solution.

The original concept for this card was created back in 2005 by Thierry Nouspikel, but was created using surface mount devices.

Features

This new version of card works exactly the same as the older version but with a couple of changes.

- 100% through-hole designed
- Completely compatible with Fred Kaal's IDE DSR
- Compatible with original 5v versions of the BQ4847 and 838-RTC real-time clocks.
- Replaced standard voltage regulator with a DC-to-DC converter that allows the card to run about 50 degrees cooler.
- Added a 5v and ground jumper to provide power to other devices
- Added a Molex 171826-4 to allow a 4-pin female to female 3.5 drive floppy power cable to plug into
    - Can be used with a Single/Double IDE2CF adapter to provide power as well as other devices like a IDE2SD adapter.
- Added a 44-pin IDE connector, which also provides power to 44 pin IDE devices
    - 44-pin only provides 5v power and ground
- Standard 40 pin IDE connector
- DSK1 Emulation with use of a DSK1 directory on IDE1

Requirements

TI-99/4A

- TI-99/4A
- Expanded Memory
- IDE compatible drive, SSD, IDE2CF, or another device capable of LBA
- Peripheral Expansion Box with Flex Cable Interface

Myarc Geneve 9640

- Boot EPROM v2.0
- Myarc Geneve 9640 with 32k SRAM Upgrade
- MDOS 7.42 Development or higher
- Peripheral Expansion Box

- IDE compatible drive, SSD, IDE2CF, or another device capable of LBA
- IDE card with DSR loaded (will not work without the DSR loaded)

Note: If using in a Geneve without the GenMod:

- For the prototype boards both 4.7KΩ resistors R10 and R11 need to be installed.
- For Production Boards SW4: #1 and #2 needs to be in the '**ON**' position.

Software

- Fred Kaal's Disk Utilities 2000 v1.7 or newer
- Fred Kaal's Disk Manager 2000 v2.2 or newer
- Fred Kaal's Geneve Disk Manager 2000 (For Geneve users only)

Note: There is an issue that has been identified with all version of the IDE card, 2005 to present. When used with a MEMEX card the IDE card is not recognized. The issue is being worked on currently.

Recommendations

It's good to make sure you always have a good copy of Fred's IDE DSR of the latest version. He has done a great job developing a stabile DSR for this card. I personally just put the IDE DSR loader and IDE Test programs in binary format onto my FinalGrom99 for easy access.

Get to know your IDE card

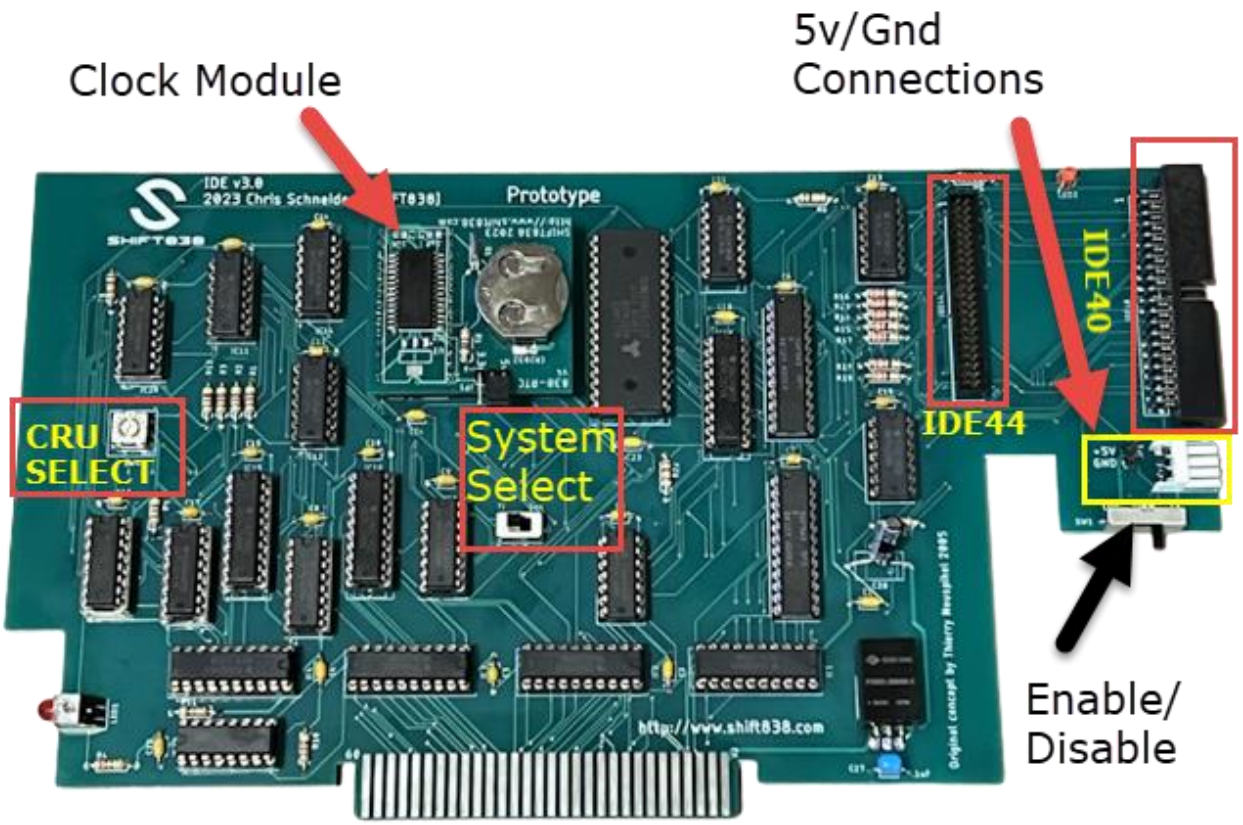

Clock Module

One of two clock modules can be installed and used, both need to be 5v versions for stability. The modules can be a BQ-4847 or the 838-RTC module. Contact shift838sup@gmail.com if you want to purchase an 838-RTC module.

Connectors

The standard 40 and 44-pin IDE device connectors. The 44-pin supplies 5v power automatically while a separate power couple will need to be connected to the device(s) that connect to the IDE 40-pin connector.

Note: You cannot use both the 40-pin and 44-pin together, you must choose one or the other.

The J1 and JP1 connector provide both 5v and ground signals for IDE devices if needed. The J1 can use a female-to-female Molex connector for use with 3.5 drives to connect directly to a device that has a connector for devices like a IDE2CF or IDE2SD adapter. The cable referenced is:

Enable/Disable Switch

This switch will either enable the card for a TI or Geneve based on switch position or turn the card completely off. Whichever system is selected here then ensure to select the same for the '***System Select***' switch.

System Select Switch

This switch controls which system the card is going to be installed in, TI or Geneve.

CRU Select

This switch allows the user to select which CRU the card will identify in the system. This is a 16-position hexadecimal switch to select the CRU.

PCB Assembly

Below is a short guide of how I assembled the boards:

1. Start with your small components first
    a. Axial Resistors and axial capacitors
2. Solder in all your IC sockets, ensuring notch is facing the correct way.
    a. All IC sockets pin #1 is facing up except:
    b. IC1-4, pin #1 faces **right** toward the back of the PEB card.
    c. IC 22, pin #1 faces **left** toward LED1.
    d. IC23 and IC24 (RTC) pin #1 faces **down** toward the edge connector that inserts into the PEB slot.
3. Solder LEDs, SW1 through SW4 and JP1
4. Solder both 40 and 44 pin IDE connectors
5. Solder both 22uF capacitors.
6. Visually inspect all solder points with a microscope if necessary to ensure no pins were missed when soldering and there are no bridged connections.
7. Ensure all excess leads are cut.
8. Do not insert ICs yet until after the Verify and Smoke Test section.

Verify and Smoke Test of IDE board

Verify Power Readings

1. Insert your newly built (no ICs populated) into the PEB or expansion unit.
2. Remove all other cards.
3. Power up the PEB/expansion unit.

4. Verify power on the DC2DC converter:

Pin 1 = VCC Input
Pin 2 = Ground
Pin 3 = VCC Output

Original TI PEB with original power supply:
Measure voltage with a multimeter, set to DC Voltage and put the common electrode on pin #2 (ground) and the positive electrode on pin #1 or pin #3.

a. Pin 1 should be receiving at least 8.0 VDC.
    i. If using the P7805-2000R DC2DC converter and the voltage supplied on pin #1 is less than 8.0 VDC then the converter will not operate and the card will not be seen by the system.
    ii. You have 3 options:
        1. Replace the Power supply in the TI-PEB
        2. Replace the P7805-2000R with a P7805-1500R as the minimum VDC required is 6.5 volts to operate.
        3. Replace the P7805-2000R with a LM7805 1.5 Amp and replace the 22uF capacitor immediately below with a .1uf 50v, replace the 22uF electrolytic with a 47uF 35v electrolytic.
        Note: Solution #3 will produce 50 degrees more heat on the card.

b. Test the output voltage by testing between pin #2 ground and pin #3 output VCC. Should be 5.0 volts or super close to it.

838-PEB or other power source using PC type power supplies

Note: This section does not address modified cards that do not have voltage regulators or DC2DC converters.

a. Test with a multi-meter across pin #1 and pin #2 and it should read 12 VDC or close it.
b. Test across pin #2 and pin #3 and it should read 5 VDC or close to it.

Smoke Test

1. Let the newly built, unpopulated IDE board run in the expansion unit for 10 to 15 minutes. Do not leave unattended and ensure you do not smell or see smoke.
2. Power down expansion unit and wait 2-3 minutes.
3. Remove IDE card
4. Re-install other expansion cards
5. Populate the IDE board with all ICs ensuring correction position of pin #1.

IDE Card Setup

Set CRU

First thing we need to do is set the CRU of the card. If the IDE card will be used for DSK1 Emulation and you want it to search the DSK1 directory on IDE1 before going to the floppy disk controller then set the CRU to >1000.

Note: DSK1 Emulation must be enabled.

CRU Settings are as follows:

Switch Setting	CRU
0	>1000
1	>1100
2	>1200
3	>1300
4	>1400
5	>1500
6	>1600
7	>1700
8	>1800
9	>1900
A	>1A00
B	>1B00
C	>1C00
D	>1D00
E	>1E00
F	>1F00

Please ensure you do not have the same CRU setup for this card as any other in the system.

1. Using a small flat-head screwdriver set the CRU Select switch to the CRU an available CRU for the system.
2. Install the IDE card into an available slot in the PEB
3. Have your copy of Fred's IDE DSR (latest version) ready, either on floppy disk or binary file on your FinalGrom99/FlashROM99.

Choose Storage Media

First choose what type of media you will be using; I personally recommend a dual IDE2CF Adapter like the one below:

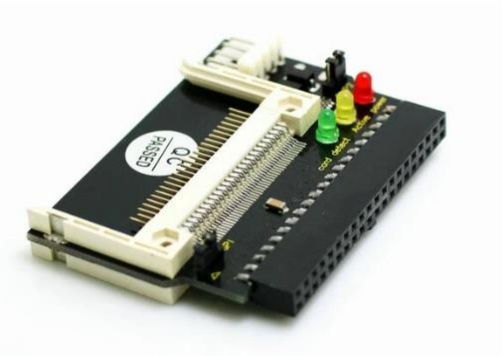

This unit has a CF Card adapter on the front and one on the back of the card so it can be recognized as Primary and Slave devices. This allows the IDE card to access IDE1-8 at 248mb per partition based on ***conventional*** metrics, where 1024 bytes = 1KB AND 1000KB = 1MB.

When obtaining one of these before using please ensure the unit is set to default for Primary/Slave and is set for 5v operation on the jumper and not 3.3v.

Remember if using older IDE hard drives, they typically require 12v power and you will need an external power source.

1. Connect your storage media to the card along with power.
    a. If only 5v, then use the power connectors on the IDE v3 card to supply the 5v power.
    b. If 12v, then use a external power supply.

DSR Loading

1. If using external power for the storage media power it up.
2. Power up your PEB
3. If using a TI-99/4A

    a. If using a TI-99/4A, power up the computer
4. If using a Myarc Geneve 9640, PEB is already powering up the Geneve

I am going to assume the user knows how to launch the IDE DSR Loader program from the TI or the Geneve. If not please refer to Fred's web page in the links section.

5. Once in the DSR Loader program has loaded press ***1*** to load the DSR on the IDE card
6. When prompted enter the second digit of the CRU that was set in ***Set CRU*** section.

At this time the DSR loader program will scan for which real-time clock is installed on the IDE card, once found the program will start writing the DSR to the cards SRAM.

7. Once the DSR is loaded, press enter.
8. Press ***2*** to set the clock of the IDE card and enter the date/time in the formats required on the screen. (time is in 24hr format)
9. Press Enter and FCTN-9 to exit
10. Go into Basic
11. Type **CALL IDETD** and press enter to display the time to make sure the clock is cycling. I typically do this command twice so I can see the seconds cycle between each command entered.
12. If you do not want DSK1 emulation on then enter **CALL IDEDSK(0)** and press enter
    a. 0 = disables
    b. 1 = enables
13. To see a status of your DSR and drives if configured as well as what clock chip is installed and if the battery is reporting adequate voltage, then type: **CALL IDEST** and press enter.

Drive Setup

Partitioning

Before anything can be copied over to the new mass storage device(s) we will need to setup the partitions and initialize them.

Setting up partitions is done through Fred's Disk Utilities 2K version 1.7 or higher. Please access his site for the latest version and information of how to setup a IDE partition table and initialize the IDE devices. Check the **Links** section for a link to Fred's website.

The below table shows the actual number of bytes per partition based on the HEX Value.

Sectors HEX Value	Number of Sectors	Actual Bytes of Storage
00008000	32768	16777216
0000C000	49152	25165824
00010000	65536	33554432
00014000	81920	41943040
00018000	98304	50331648

0001C000	114688	58720256
00020000	131072	67108864
00024000	147456	75497472
00028000	163840	83886080
0002C000	180224	92274688
00030000	196608	100663296
00034000	212992	109051904
00038000	229376	117440512
0003C000	245760	125829120
00040000	262144	134217728
00044000	278528	142606336
00048000	294912	150994944
0004C000	311296	159383552
00050000	327680	167772160
00054000	344064	176160768
00058000	360448	184549376
0005C000	376832	192937984
00060000	393216	201326592
00064000	409600	209715200
00068000	425984	218103808
0006C000	442368	226492416
00070000	458752	234881024
00074000	475136	243269632
00078000	491520	251658240
0007C000	507904	260046848

Booting from IDE1 with Myarc Geneve 9640

In order to boot the Myarc Geneve 9640 from IDE1 the MDOS 7.42 Development or higher version is required.

The Myarc Geneve 9640 will require the 2.0 Boot EPROM to work with the IDE card

The main MDOS files that need to be copied to the root directory of IDE1 are:

- SYSTEM-SYS
- LOAD-IDE

These are the only 2 files required to boot, however you will want to copy all MDOS related files to a MDOS directory and using an AUTOEXEC file to add your path statements, etc. The AUTOEXEC file should go into the root directory of IDE1 along with your SYSTEM-SYS and LOAD-IDE files.

Example AUTOEXEC file

The below is an example of my autoexec file

```
ECHO OFF
TIMODE
PATH E:\;E:\MDOS;E:\QDE;E:\EDITOR;
PROMPT $N:\$P$g
SCSMAP 1A
SCSMAP 2B
SCSMAP 3C
SCSMAP 4D
ASSIGN E=SCS1:
ASSIGN F=SCS2:
ASSIGN G=SCS3:
ASSIGN H=SCS4:
ASSIGN I=TIP1.
ASSIGN J=HDS1:
E:
ECHO E=IDE1
ECHO F=IDE2
ECHO G=IDE3
ECHO H=IDE4
ECHO I=TIP1
```

Using the SCSMAP remaps the current IDE drives the SCSI equivalent device names.

Please be aware for the Geneve only 6 IDE partitions can be seen at one time.

SCSREMAP & ASSIGN Device explanation

SCSMAP (IDE DEVICE #, Partition)

- SCSMAP 1A - Maps IDE1, partition #1 to SCS1 device.
- SCSMAP 2B - Maps IDE2, partition #2 to SCS2 device and so on.
- ASSIGN E=SCS1: - Reassigns E: drive to be SCS1 or in this case IDE1 and so on.

Known Issues

All versions of the IDE card if used in a Geneve system with a MEMEX card installed the IDE card will not be seen. The issues is being worked and hopefully a resolution will be provided soon.

Links

- SHIFT838 Web Site: https://www.shift838.com
- SHIFT838 Web Store: https://www.shift838.com/store
- Fred Kaal's Web Site: https://hexbus.com/ti99geek
- AtariAge Message Forum: https://www.atariage.com

Support

If you need support feel free to drop an email to support@shift838.com

Telnet to heatwave.ddns.net port 9640