TM990/1481

T-BUS BIT-SLICE PROCESSOR BOARD

FEATURES:

- **Emulates 9900 architecture.**
- **2 BOARD Bit Slice processor using LS TTL.**
- **Up to 40 times performance increase compared with TM990/101MA.**
- **Standard 9900 instruction set supported.**
- **Additional FLOATING POINT arithmetic instructions.**
- **Arithmetic overflow interrupt.**
- **EIA Port and 2 timers.**
- **Compatible with other T-BUS modules.**
- **Instruction "look ahead" for increased performance.**

DESCRIPTION:

The TM990/1481 is a high-speed general purpose central processing unit, implemented on two modules, utilizing Schottky and low power Schottky TTL logic. It offers up to 40 times performance improvement over the TM900/100MA or TM990/101MA single-board computers.

The processor board is designed around TI's SN74S481 bit-slice processor. The processor's major operating registers are contained within the SN74S481 chips. These registers are: the program counter (PC), the memory counter (MC), the working register (WR), and the extended working register (XWR). This module also contains the status register, register file (R0–R15), and the instruction register. The principal instruction register is on the controller module. The instruction register on the processor is used to store the variable part of the instruction such as addressing parameters.

The interrupt and transfer vector generation logic is included on this module. Interrupts are controlled by an on-board TMS 9901 programmable systems interface device. It can selectively mask out or test any of the 15 interrupts and generate a four-bit interrupt vector.

The controller board contains the control memory, which stores the microinstructions emulating the TMS 9900 and generating new instructions and enhances the integer and floating-point arithmetic. It also contains the instruction register, clock control logic, an RS232 serial communication controller (CRU hardware address 40), and ready handshaking logic to enable the TM990/1481 to operate with TM990 family memory boards.

ORDERING INFORMATION:

Part number	
TM990/1481	2 board set including link cables, 5 MHz Bus Clock
TM990/201-44	EPROM/RAM expansion module
TM990/203A-13	Dynamic RAM expansion module
TM900/403	TIBUG Interactive Debug Monitor
TM990/433	Floating point demonstration software

BLOCK DIAGRAM:

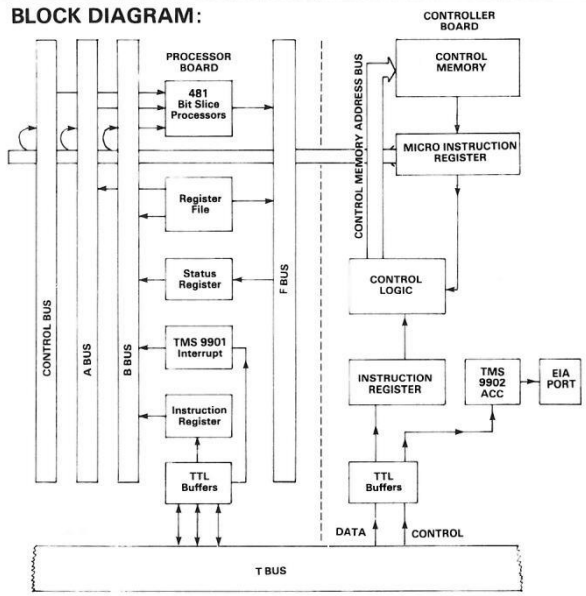

INSTRUCTIONS ADDITIONAL TO STANDARD 9900 INSTRUCTION SET

ASSEMBLY LANGUAGE MNEMONIC	INSTRUCTION	ASSEMBLY LANGUAGE MNEMONIC	INSTRUCTION
AD	Add Double Precision Real	LD	Load Double Precision
AR	Add Real	LR	Load Real
CDE	Convert Double Precision Real to Extended Integer	LST	Load Status Register
CDI	Convert Double Precision Real to Integer	LWP	Load Workspace Pointer Register
CED	Convert Extended Integer to Double Precision Real	MD	Multiply Double Precision Real
CER	Convert Extended Integer to Real	MPYS	Multiply Signed
CID	Convert Integer to Double Precision Real	MR	Multiply Real
CIR	Convert Integer to Real	NEGD	Negate Double Precision Real
CRE	Convert Real to Extended Integer	NEGR	Negate Real
CRI	Convert Real to Integer	SD	Subtract Double Precision Real
DD	Divide Double Precision Real	SR	Subtract Real
DIVS	Divide Signed	STD	Store Double Precision Real
DR	Divide Real	STR	Store Real

CONNECTORS:

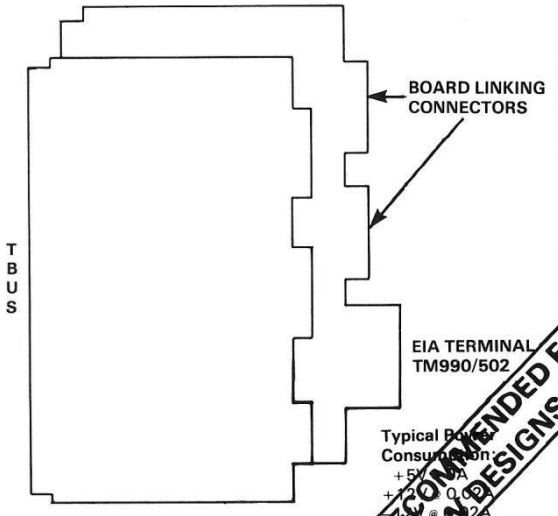

Typical Power Consumption:
+5V @ 0.9A
+12V @ 0.0[illegible]
-12V @ 0.02A

NOT RECOMMENDED FOR NEW DESIGNS