SR 98

REV	REVISIONS DESCRIPTION	DATE	APPROVED
A	PRODUCTION RELEASE PER ECO NO. 01085	4/18/89	S. OHAZAKI

50Hz 0.4A

POWER SUPPLY 27W 220V SWEDEN

PART NO.	APPROVED VENDOR	VENDOR PART NO.
C103594-001	MITSUMI	SR98S

Output: DC 5V 3A
DC 12V 0.9A

P.N° CA070086-002

		DRAWN BY / DATE: L. Ianba. 4-14-89	ATARI CORPORATION
		CHECKED / DATE: K. Kitagawa 4/18/89	TITLE: POWER SUPPLY 27W 220V SWEDEN
		ENGINEER / DATE: A. Shinagawa 4-17-89	
CA200255-xxx	1040STF	APPROVED / DATE	SIZE: A; DRAWING NO.: C103594-xxx; REV: A
NEXT ASSY	USED ON ORIGINAL MODEL	APPROVED / DATE: S. OHAZAKI 4/18/89	SCALE: NONE; SHEET 1 OF 8
APPLICATION			

THIRD ANGLE SYSTEM. DIMENSION mm

1) ELECTRICAL CHARACTERISTICS

1-1 INPUT CONDITION

1-1-1 Input Voltage	AC220/240 V
1-1-2 Input Voltage Range	± 10 %
1-1-3 Frequency	50/60 Hz
1-1-4 Rated Current (*1)	2 A max
1-1-5 Inrush Current	35A max

1-2 OUTPUT CHARACTERISTICS

1-2-1 Output Voltage	A--	DC+5.1 V
	B--	DC+12V
1-2-2 Output Current	A--	1.5 ~3.0 A
	B--	0 ~0.9 A
1-2-3 Output Effect (*2)	A--	± 0.255 V
	B--	± 1.2 V
1-2-4 Ripple and Noise (*1)	A--	100mV P-P
	B--	150mV P-P
1-2-5 Over Curr.Protection		Short Protection
1-2-6 Start-up Time (*1)	A--	150msec max
	B--	150msec max
1-2-7 Hold-up Time (*1)	A--	10msec min
	B--	10msec min
1-2-8 Efficiency (*1)		55% min

1-3 Special Specifications

1-3-1 Withstand Voltage (*3)	AC1.5KV 1min (cutoff current 10mA)
1-3-2 Insulation Resistance (*3)	10MΩ min DC500V

1-4 Radiation noise

Meet to VDE 0871

1) ELECTRICAL CHARACTERISTICS

1-1 INPUT CONDITION

1-1-1 Input Voltage		AC220 V
1-1-2 Input Voltage Range		± 10 %
1-1-3 Frequency		50 Hz
1-1-4 Rated Current (*1)		2A max.
1-1-5 Inrush Current		35A max.

1-2 OUTPUT CHARACTERISTICS

1-2-1 Output Voltage	A	DC+5.1V
	B	DC+12V
1-2-2 Output Current	A	1.5 to 3.0 A
	B	0 to 0.9 A
1-2-3 Output Effect (*2)	A	± 0.255 V
	B	± 1.2 V
1-2-4 Ripple and Noise (*1)	A	100mV P-P
	B	150mV P-P
1-2-5 Over Curr. Protection		Short Protection
1-2-6 Start-up Time (*1)	A	150m sec max.
	B	150m sec max.
1-2-7 Hold-up Time (*1)	A	10m sec min.
	B	10m sec min.
1-2-8 Efficiency (*1)		55% min.

1-3 SPECIAL SPECIFICATIONS

1-3-1 Withstand Voltage (*3)	AC1.25KV 1min. (Cutoff current 10mA)
1-3-2 Insulation Resistance (*3)	10MΩ min. DC500V

1-4 RADIATION NOISE — Meet to VDE 0871

1-5 SAFETY STANDARD — LIMITED APPROVED BY SEMKO

2) MECHANICAL CHARACTERISTICS

2-1 VIBRATION-PROOF CHARACTERISTIC

The specifications and electrical characteristics of the product can be maintained after subjected to the vibration with a frequency variation range of 10Hz to 55Hz, an amplitude of 1mm, and a cycle time of 1 minute for 2 hours in each of X,Y,and Z directions.

2-2 DROP TEST

When packed for shipment, the product must drops on the concrete floor on each flat faces of it from 80cm hight, and this should work normally.

3) ENVIRONMENTAL

3-1 OPERATING TEMPERATURE	0 TO+50°C. (full load)
3-2 STORAGE TEMPERATURE	-20 TO+75°C.

3-3 HUMIDITY

After kept in box whose temperature is 40 ± 2°C and relative humidity 90 TO 95 % for 48 hours, this kept a normal condition for 12 hours, and this should work normally.

(*1) Input Voltage AC 220V. At Rated Conditions
(*2) Line Regulation, Load Regulation, Crose Regulation
(*3) Primary - Secondary, Primary - Earth

PARTS LIST

LOCATION	PART NEME	DESCRIPTION	QTY
IC201	IC	HA17431P	1
or		L5431	
or		TL431CLP	
⚠ PC101	PHOTO COUPLERS	PC101	1
Q101	TRANSISTOR	2SC2979	1
Q102	TRANSISTOR	2SC2655	1
or		2SC2060	
⚠ D101	DIODE	RB155 SILICON STACKS	1
D102	DIODE	FR106 FAST RECOVERY	1
or		ERB44-08 FAST RECOVERY	
D103	DIODE	FR103 FAST RECOVERY	1
or		ERB44-02 FAST RECOVERY	
D104	DIODE	1S2076 SILICON	1
or		1S2473 SILICON	
D105	DIODE	1S2076 SILICON	1
or		1S2473 SILICON	
D201	DIODE	FR303 FAST RECOVERY	1
or		30DF2 FAST RECOVERY	
D202	DIODE	HRW34-01 SHOTTKY BARRIER	1
or		ESAC82-004 SHOTTKY BARRIER	
⚠ T101	TRANS FORMERS	EI33 SWITCHING TRANSFORMER	1
⚠ L101	LINE FILTER	UF2327S-403YOR3	1
L201	CHOKE COIL	10uH	2
L202	CHOKE COIL	10uH	
⚠ C101	CAPACITOR	0.47uF/250V(CFX) METALLIZED	1
or		0.47uF/250V(VE) METALLIZED	
⚠ C102	CAPACITOR	0.0022uF/400V(KC) CERAMIC	1
or		0.0022uF/400V(CS) CERAMIC	
⚠ C103	CAPACITOR	0.0022uF/400V(KC) CERAMIC	1
or		0.0022uF/400V(CS) CERAMIC	
⚠ C207	CAPACITOR	0.0022uF/400V(KC) CERAMIC	1
or		0.0022uF/400V(CS) CERAMIC	
C105	CAPACITOR	0.01uF/630V METALLIZED	1
C106	CAPACITOR	0.00022uF/2KV(R) CERAMIC	1
or		0.00022uF/2KV(CK) CERAMIC	
C107	CAPACITOR	0.1uF/50V POLYESTER	1
or		0.1uF/50V(AMZ) POLYESTER	
C104	CAPACITOR	47uF/400V(NM)	1
⚠ C111	CAPACITOR	0.001uF/400V(KC)	1
or		0.001uF/400V(CS)	

ATARI® ATARI CORPORATION

SIZE	DRAWING NO.	REV
A	C103594-xxx	A

SCALE NONE | SHEET 4 OF 8

THIRD ANGLE SYSTEM. DIMENSION : mm

PARTS LIST

LOCATION	PART NEME	DESCRIPTION		QTY
C108	CAPACITOR	0.1uF/50V	POLYESTER	1
or		0.1uF/50V(AMZ)	POLYESTER	
C109	CAPACITOR	0.068uF/50V	POLYESTER	1
or		0.068uF/50V(AMZ)	POLYESTER	
C110	CAPACITOR	0.022uF/50V	POLYESTER	1
or		0.022uF/50V(AMZ)	POLYESTER	
C201	CAPACITOR	2200uF/10V	ALUM ELECT	2
C203	CAPACITOR	2200uF/10V	ALUM ELECT	
C202	CAPACITOR	2200uF/16V	ALUM ELECT	1
C204	CAPACITOR	1000uF/16V	ALUM ELECT	1
C205	CAPACITOR	1000uF/10V	ALUM ELECT	1
C206	CAPACITOR	1uF/50V	ALUM ELECT	1
R101	RESISTOR	8.2Ω/3W	WIRE WOUND CEMENT	1
R103	RESISTOR	100KΩ/2W	METAL OXIDE FILM	1
R104	RESISTOR	1KΩ/2W	METAL OXIDE FILM	2
R105	RESISTOR	1KΩ/2W	METAL OXIDE FILM	
R205	RESISTOR	100Ω/3W	METAL OXIDE FILM	1
R106	RESISTOR	3.3Ω/1W	METAL OXIDE FILM	1
R109	RESISTOR	75Ω/2W	METAL OXIDE FILM	1
R102	RESISTOR	390KΩ/$\frac{1}{2}$W	CARBON	1
R204	RESISTOR	100Ω/$\frac{1}{2}$W	CARBON	1
R107	RESISTOR	2KΩ/$\frac{1}{4}$W	CARBON	1
R108	RESISTOR	470Ω/$\frac{1}{4}$W	CARBON	2
R111	RESISTOR	470Ω/$\frac{1}{4}$W	CARBON	
R110	RESISTOR	47Ω/$\frac{1}{4}$W	CARBON	1
R114	RESISTOR	22Ω/$\frac{1}{4}$W	CARBON	1
R112	RESISTOR	10Ω/$\frac{1}{4}$W	CARBON	2
R113	RESISTOR	10Ω/$\frac{1}{4}$W	CARBON	

PARTS LIST

	LOCATION	PART NEME	DESCRIPTION	QTY
	R201	RESISTOR	2.7KΩ/$\frac{1}{4}$W CARBON	1
	R202	RESISTOR	2.4KΩ/$\frac{1}{4}$W CARBON	1
	R203	RESISTOR	24Ω/$\frac{1}{4}$W CARBON	1
	VR201	RESISTOR	1KΩ VARIABLE	1
		HOLDER-FUSE		2
⚠		FUSE	250V/T1A	1
⚠		INSULATION PLATE		1
		CHASSIS		1
	D203 or	DIODE	1N4746	1
		DIODE	RD18F	
		HEAT SINK	AL,t=2m/m	2
⚠		SWITCH	T-824 COLOR : BLACK	1
⚠		AC INLET	AC-P01	1
⚠		SARCON-TUBE		1
		SUPPORT-TR		2
		CONNECTOR-ASSY	171822-6 AWG22 UL1007	1
⚠		P.C. BOARD		1
		TUBE	ϕ 24	1
		TUBE	ϕ 5	2
		SCREW	M3 X 6 WIAT STAR WASHER	2
		SCREW	M3 X 6 FLAT HEAD	2
		SCREW	M3 X 6 DOUBLE SEMS	4
		SCREW	M4 X 6 PAN SEMS	1
		SCREW	M3 X 6 PAN SEMS	2
		WASHER	STAR WASHER	1
		WIRE-JUMP		5
		WIRE	AWG 22 UL1617	1
		WIRE	AWG 22 UL1617	1
		WIRE-ASSY	AWG 22 UL1617	1
		WIRE-ASSY	AWG 22 UL1617	1
		WIRE-ASSY(EARTH)	1.25-M4 AWG18 UL1015 CSA TEW	1
		BAND		3
		LABEL-RATING		1
		LABEL-CAUTION		1
		LABEL-CAPACITOR		1

ATARI® ATARI CORPORATION

SIZE	DRAWING NO.	REV
A	C103594-xxx	A
SCALE NONE	SHEET 6 OF 8	

THIRD ANGLE SYSTEM. DIMENSION : mm

REV	REVISIONS DESCRIPTION	DATE	APPROVED
	SEE SHEET 1.		

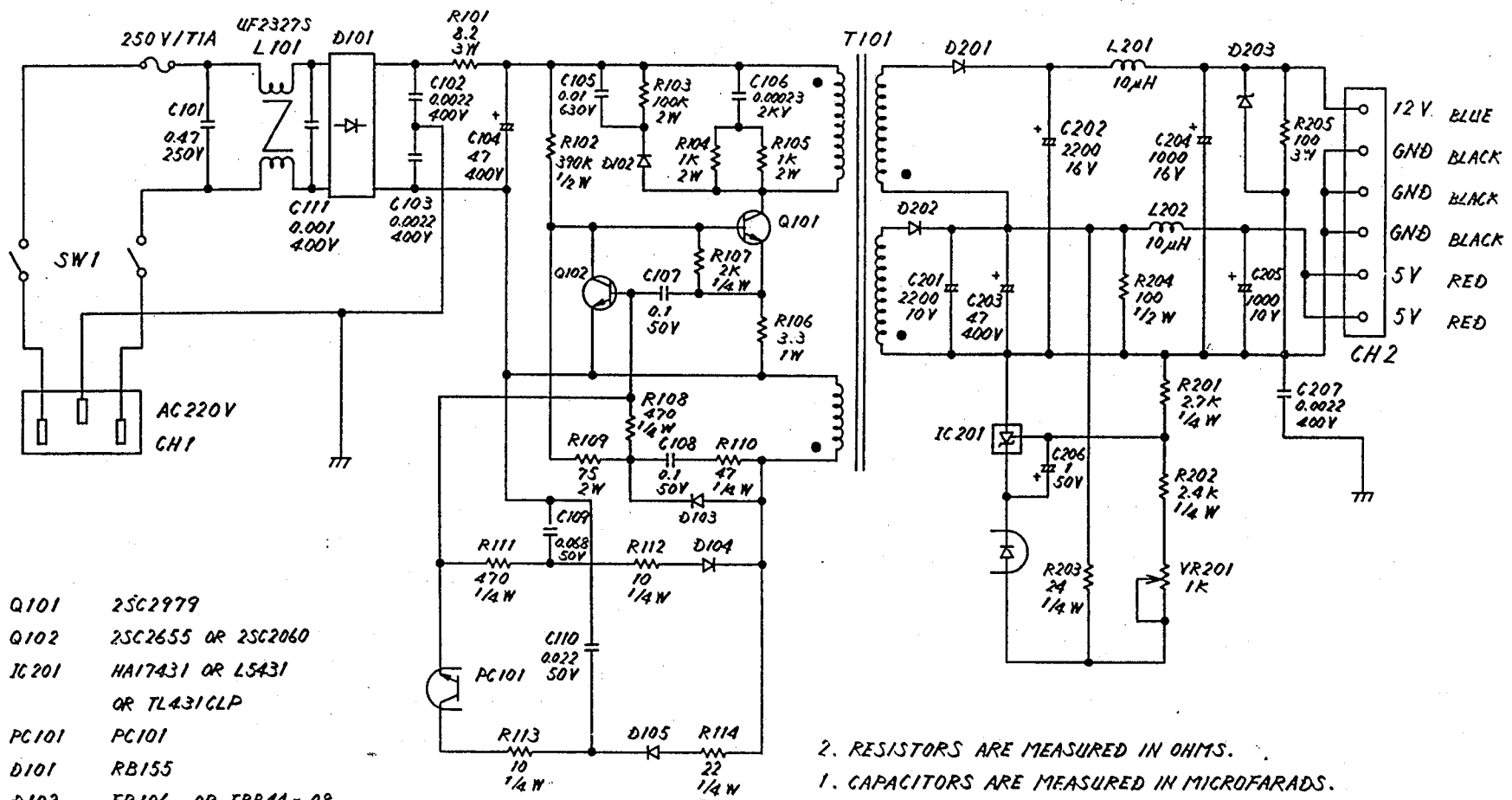

Q101	2SC2979
Q102	2SC2655 OR 2SC2060
IC201	HA17431 OR LS431 OR TL431CLP
PC101	PC101
D101	RB155
D102	FR106 OR ERB44-08
D103	FR103 OR ERB44-02
D104, D105	1S2076 OR 1S2473
D201	FR303 OR 30DF2
D202	HRW34-01 OR ESAC82-04
D203	1N4746 OR RD18F

NOTES – UNLESS OTHERWISE SPECIFIED:

1. CAPACITORS ARE MEASURED IN MICROFARADS.
2. RESISTORS ARE MEASURED IN OHMS.

NEXT ASSY	USED ON ORIGINAL MODEL
APPLICATION	

UNLESS OTHERWISE SPECIFIED TOLERANCES

ON LINIER DIMENSIONS	ON ANGULAR DIMENSIONS
UNDER 30 ±0.1	
30 THRU 300 ±0.2	±0.5
OVER 300 ±0.4	

MATERIAL

FINISH

		DATE
DRAWN BY	E. Kuramochi	4-14-89
CHECKED	Y. Kitagawa	4/18/89
ENGINEER	A. Shinagawa	4-17-89
APPROVED		
APPROVED	S. OKAMAKI	4/21/89

ATARI CORPORATION

TITLE: POWER SUPPLY 27W 220V SWEDEN

SIZE: B DRAWING NO.: C103594-xxx REV: A

SCALE: NONE SHEET 7 OF 8

REV	REVISIONS DESCRIPTION	DATE	APPROVED
	SEE SHEET 1.		

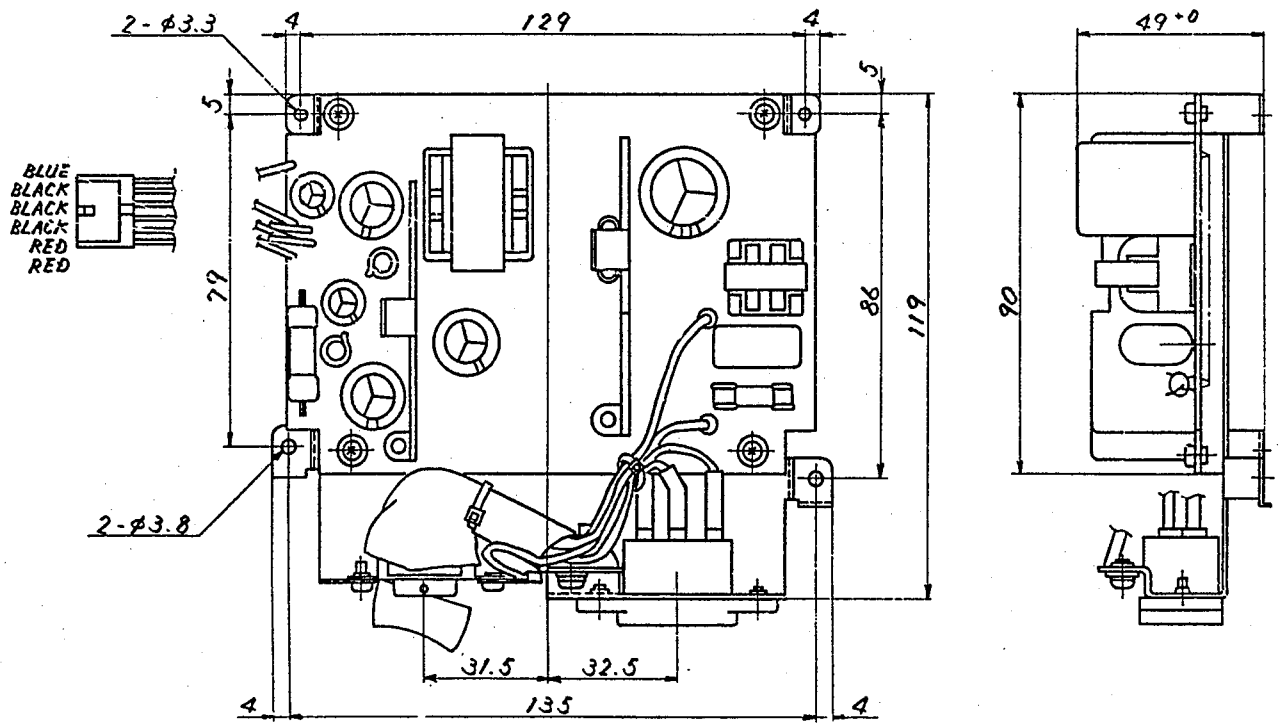

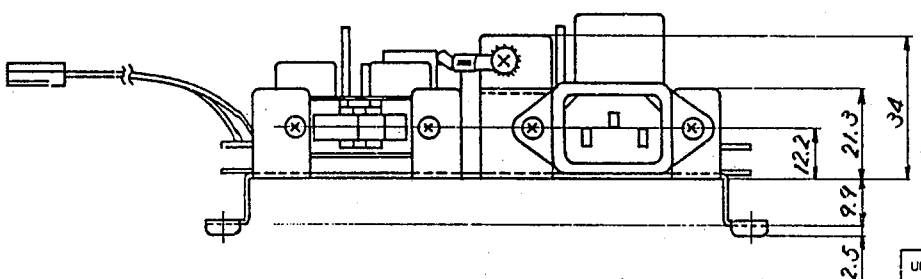

NOTES—UNLESS OTHERWISE SPECIFIED:

NEXT ASSY	USED ON ORIGINAL MODEL
APPLICATION	

UNLESS OTHERWISE SPECIFIED TOLERANCES

ON LINER DIMENSIONS	ON ANGULAR DIMENSIONS
UNDER 30 ± 0.1	
30 THRU 300 ± 0.2	± 0.5
OVER 300 ± 0.4	

MATERIAL

FINISH

		DATE
DRAWN BY	E. Kuramochi	4-13-89
CHECKED	K. Kitagawa	4/12/89
ENGINEER	O. Shinagawa	4-17-89
APPROVED		
APPROVED	S. Okada	4/18/89

ATARI CORPORATION

TITLE POWER SUPPLY 27 W 220 V SWEDEN

SIZE B DRAWING NO C103594-xxx REV A

SCALE NONE SHEET 8 OF 8

REV	REVISIONS DESCRIPTION	DATE	APPROVED

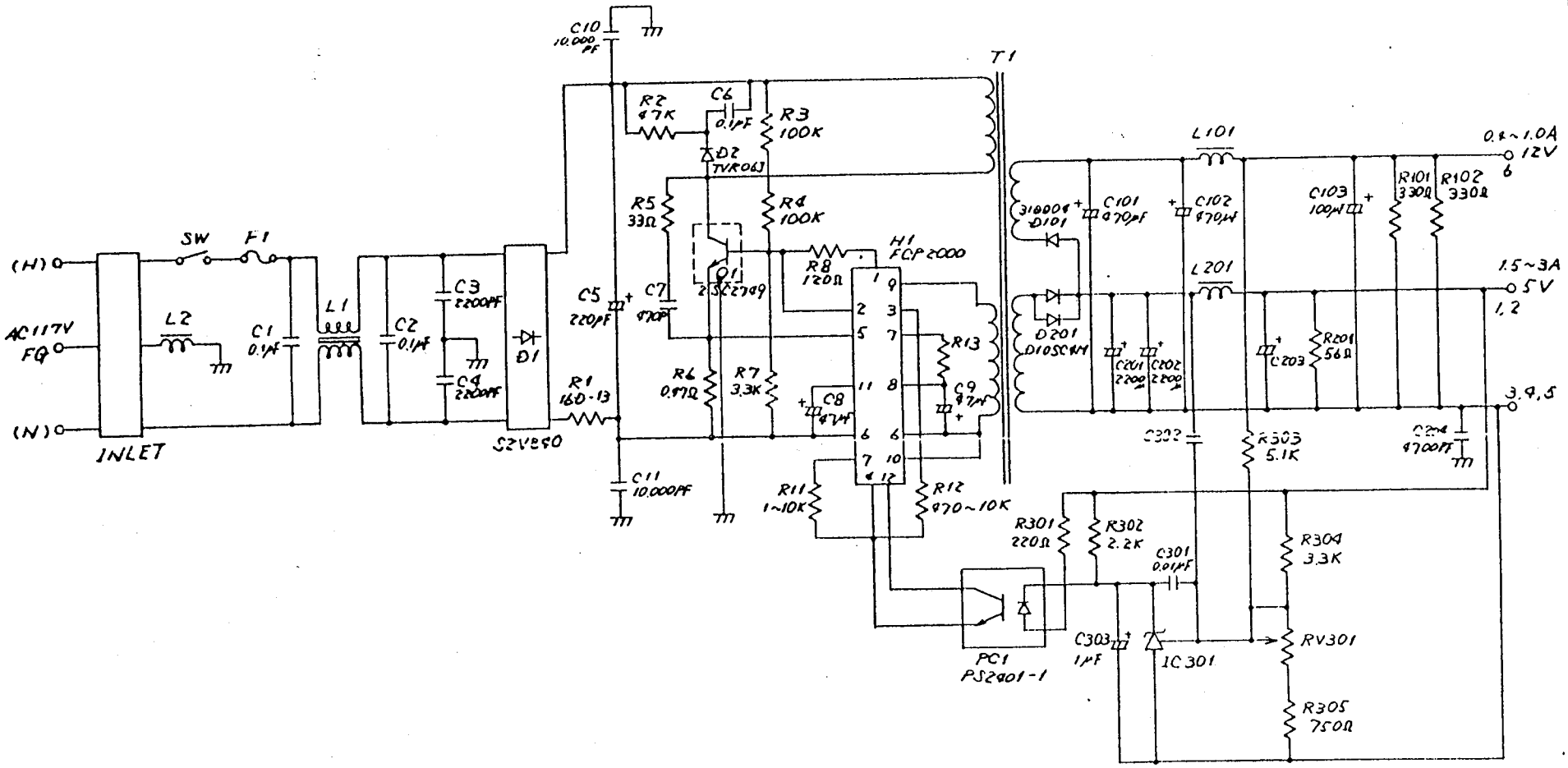

TOLERANCES	
UNDER 30	±0.1
30 THRU 9	±0.2
OVER 300	±0.4

USED ON

NEXT ASSY

MATERIAL

FINISH

DRAWN BY I. Yoshida DATE 4/30/86

CHECKED DATE

ENGINEER DATE

APPROVED DATE

APPROVED DATE

ATARI

ATARI (JAPAN) CORPORATION
Toranomon Kiyoshi Building 3F
4-3-10, Toranomon Minato-ku, Tokyo 105

TITLE
TYPICAL 1040STF(M) POWER SUPPLY

SIZE B DRAWING NO REV

SCALE NONE SHEET 1 OF 1

REV	REVISIONS DESCRIPTION	DATE	APPROVI
	SEE SHEET 1.		

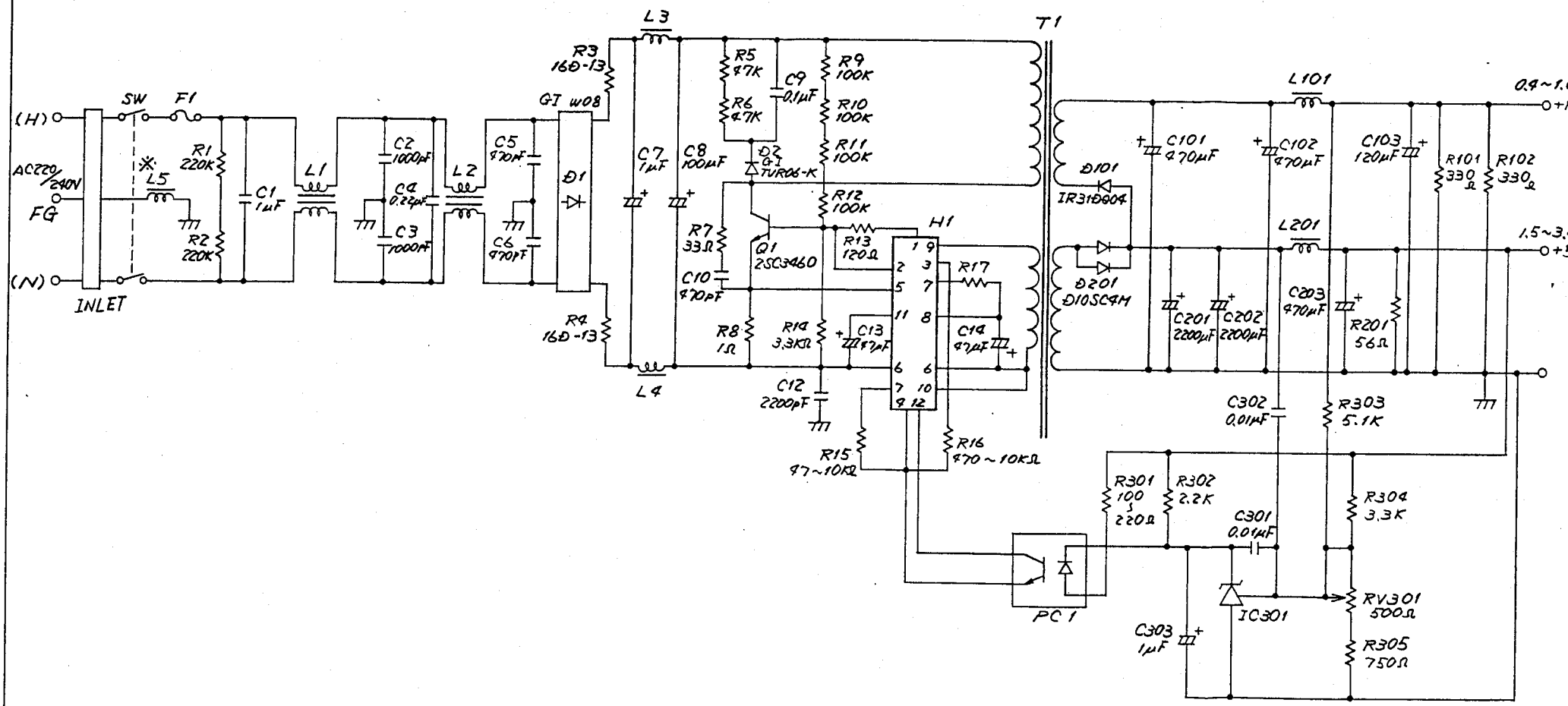

1. ※ ; L5 ; CA070086-002 ONLY.

NOTES-UNLSS OTHERWISE SPECIFIED ;

TOLERANCES	
UNDER 30	±0.1
30 THRU 300	±0.2
OVER 300	±0.4

USED ON: 520STFM / 1040STFM

NEXT ASSY

MATERIAL

FINISH

DRAWN BY: I. Yoshida DATE: 5/8/86

CHECKED DATE

ENGINEER: A. Shinagawa DATE: 6-26-86

APPROVED DATE

APPROVED: [signature] DATE: 7/1/86

ATARI (JAPAN) CORPORATION
Toranomon Kiyoshi Building 3F
4-3-10, Toranomon Minato-ku, Tokyo 105

TITLE: POWER SUPPLY ASSY (220 ~ 240 V)

SIZE: B DRAWING NO.: CA070086-xxx RE: A

SCALE: NONE SHEET: 5 OF 5

THIRD ANGLE SYSTEM. DIMENSION

REV	REVISIONS DESCRIPTION	DATE	APPROVED
A	PRODUCTION RELEASE	7/20/87	

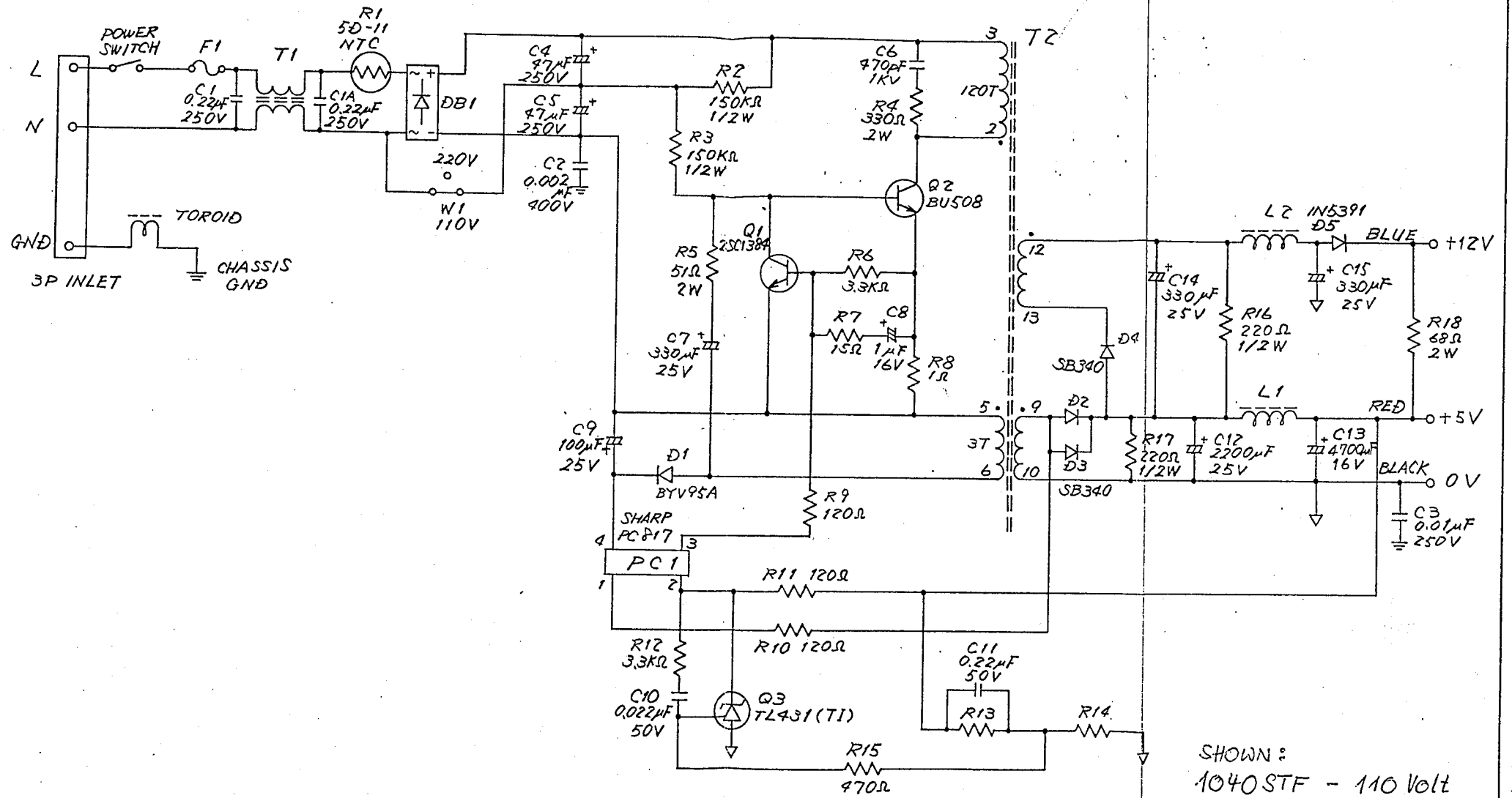

SHOWN:
1040 STF - 110 Volt

TOLERANCES	
UNDER 30	±0.1
30 THRU 300	±0.2
OVER 300	±0.4

USED ON: ASP34-1
NEXT ASSY:
MATERIAL:
FINISH:

		DATE
DRAWN BY	I. Yoshida	9/23/86
CHECKED	K. Kitagawa	9-18-86
ENGINEER	A. Shinagawa	10-23-86
APPROVED		
APPROVED		10/23/86

ATARI (JAPAN) CORPORATION
Toranomon Kiyoshi Building 3F
4-3-10, Toranomon Minato-ku, Tokyo 105

TITLE: SCHEMATIC DIAGRAM (ASP34-1)

SIZE: B | DRAWING NO. C070798 | REV A

SCALE: NONE | SHEET 1 OF 1

THIRD ANGLE SYSTEM DIMENSION : mm

SCHEMATIC
SWITCHING POWER SUPPLY
MODEL ASP34-2
Apply FOR TUV/VDE VERSION ATMC ENG. 5-8-86

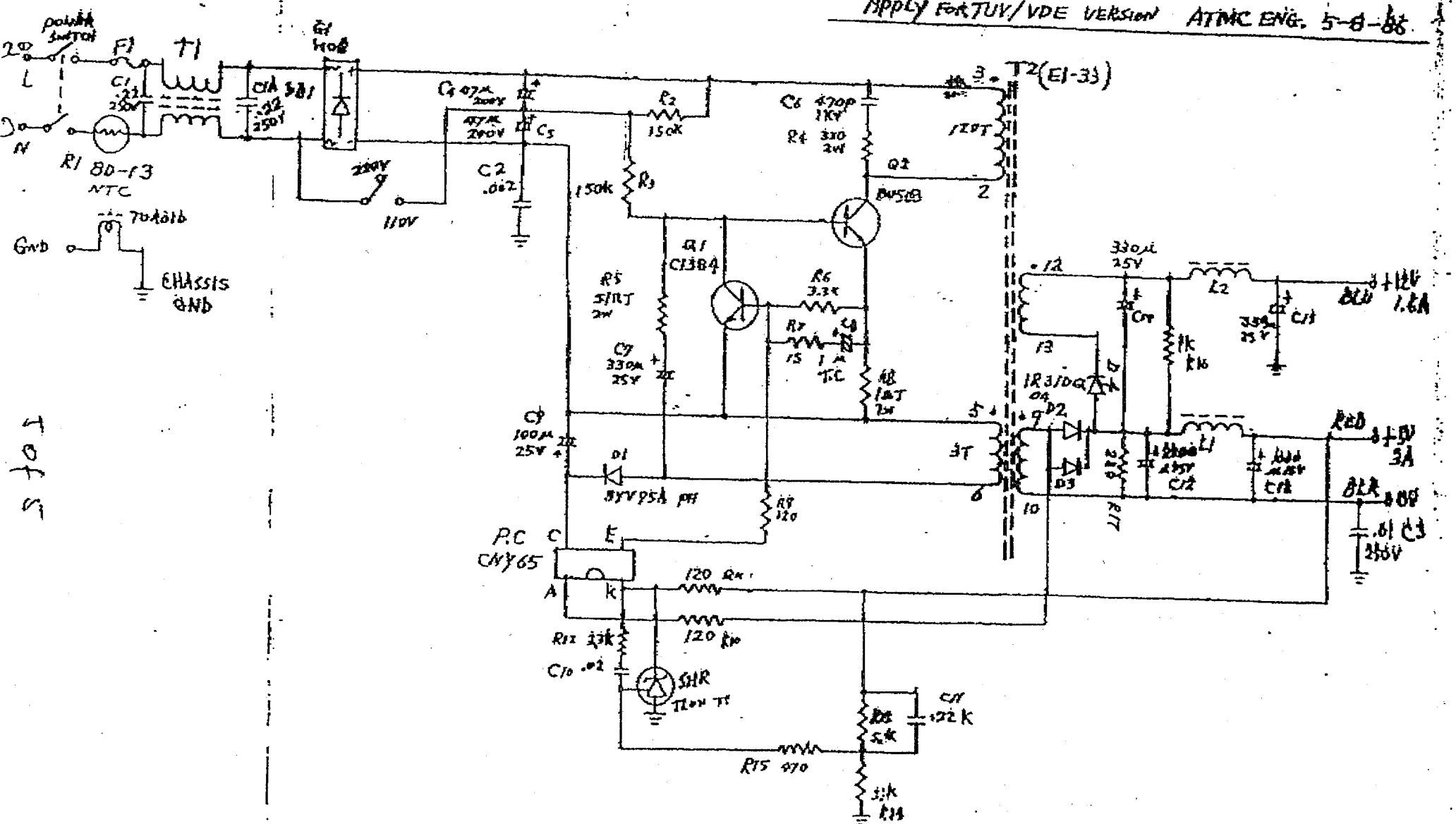

REVISION	DESCRIPTION	APV'D	DATE
01			

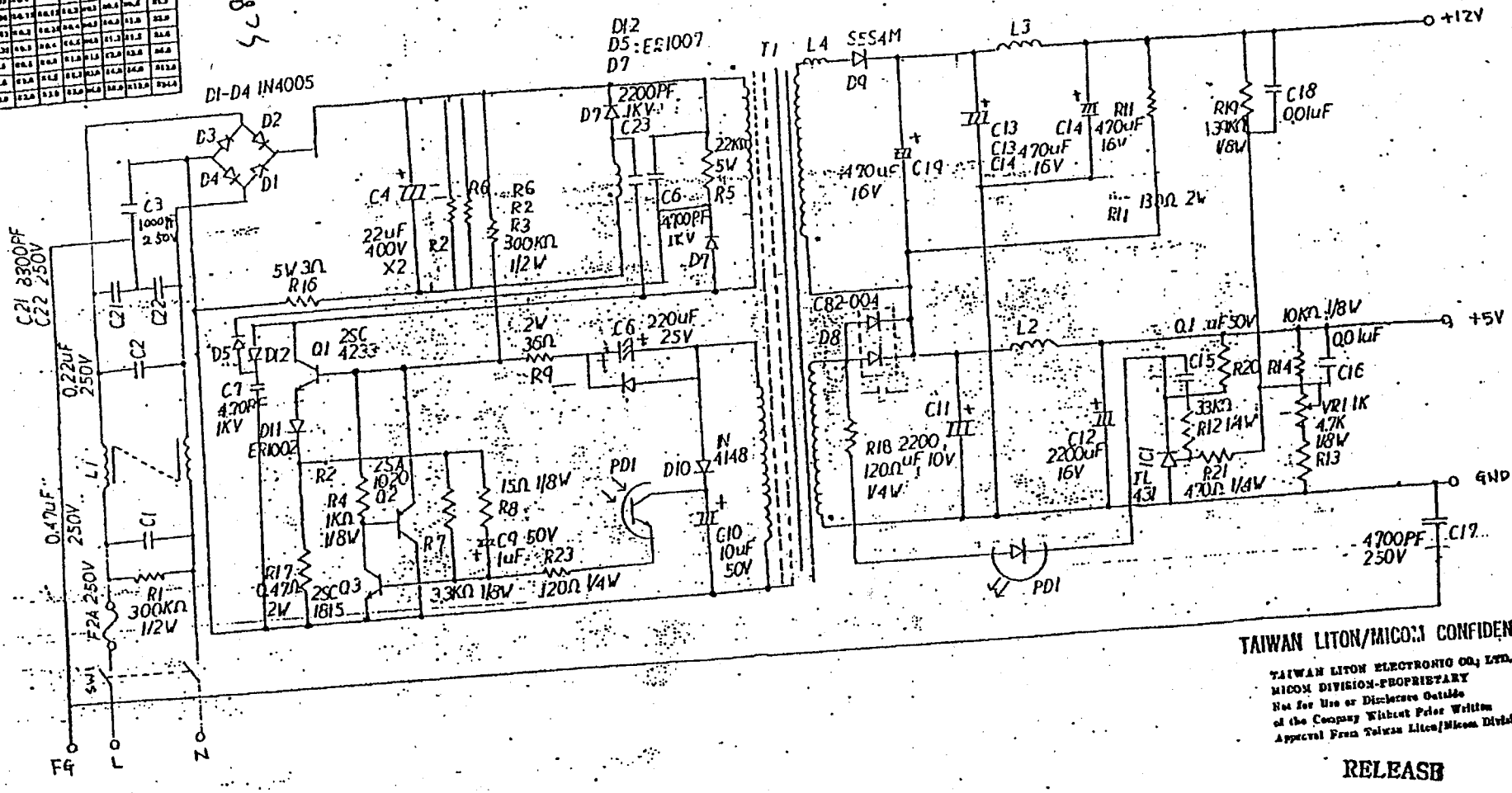

TAIWAN LITON/MICOM CONFIDENTIAL

TAIWAN LITON ELECTRONIC CO., LTD.
MICOM DIVISION-PROPRIETARY
Not for Use or Disclosure Outside
of the Company Without Prior Written
Approval From Taiwan Liton/Micom Division

RELEASE

DEC 13 1988

PC. NO	NAME	MAT	QUAN	NOTES

DRAWN	CHECKER	COPY TO	TITLE:
			TAIWAN LITON FE-2400-1

REVISION			
	21 Jul 07		

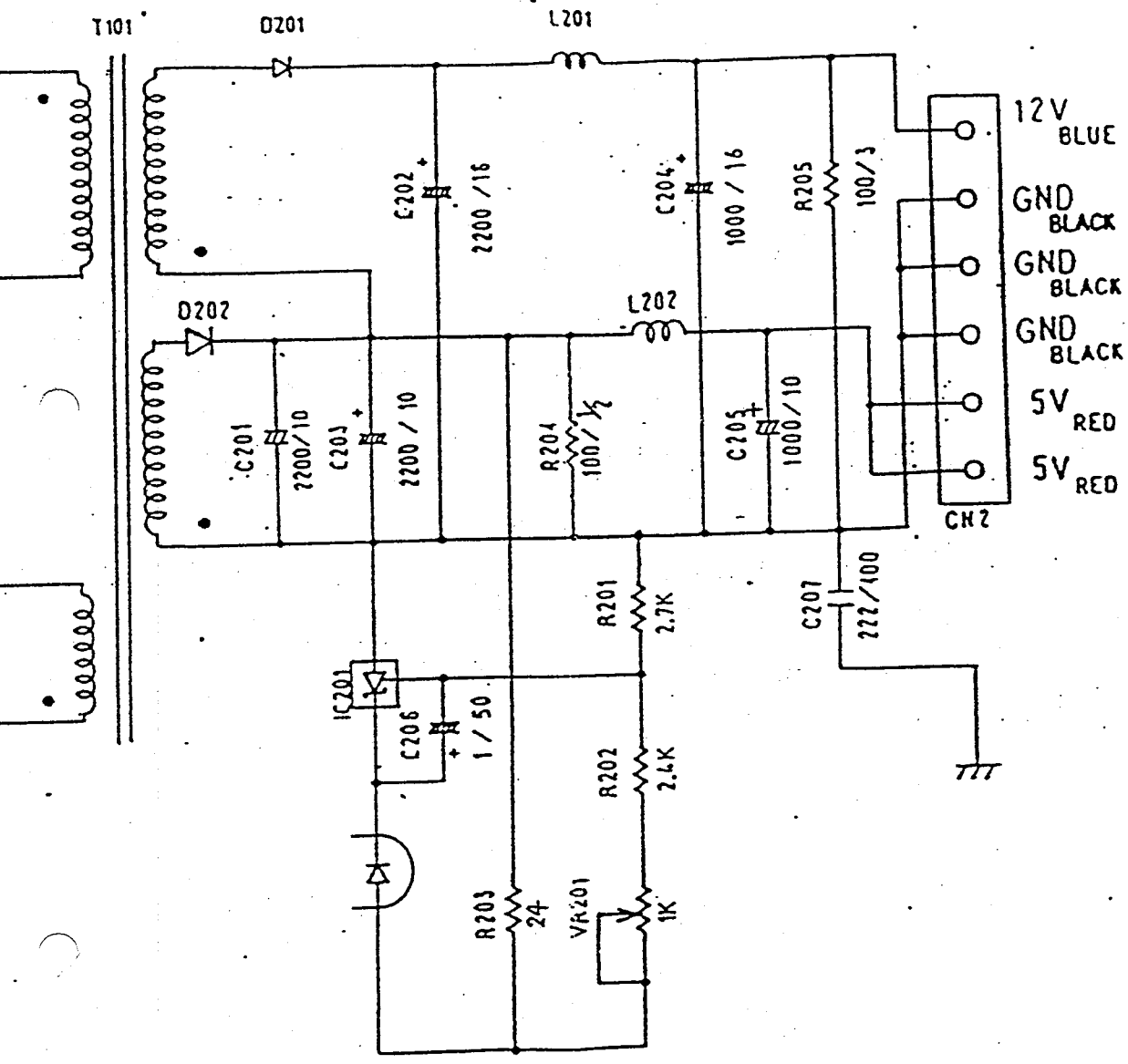

THIRD ANGLE PROJECTION	SCALE	TOLERANCE	ASSEMBLY DRWG No.	SR98 SCHEMATIC DIAGRAM
	—			

DRAWN	CHECKED	CHECKED	APPROVED	CODE IDENT No.	FILE No.
				R-68	0168 01

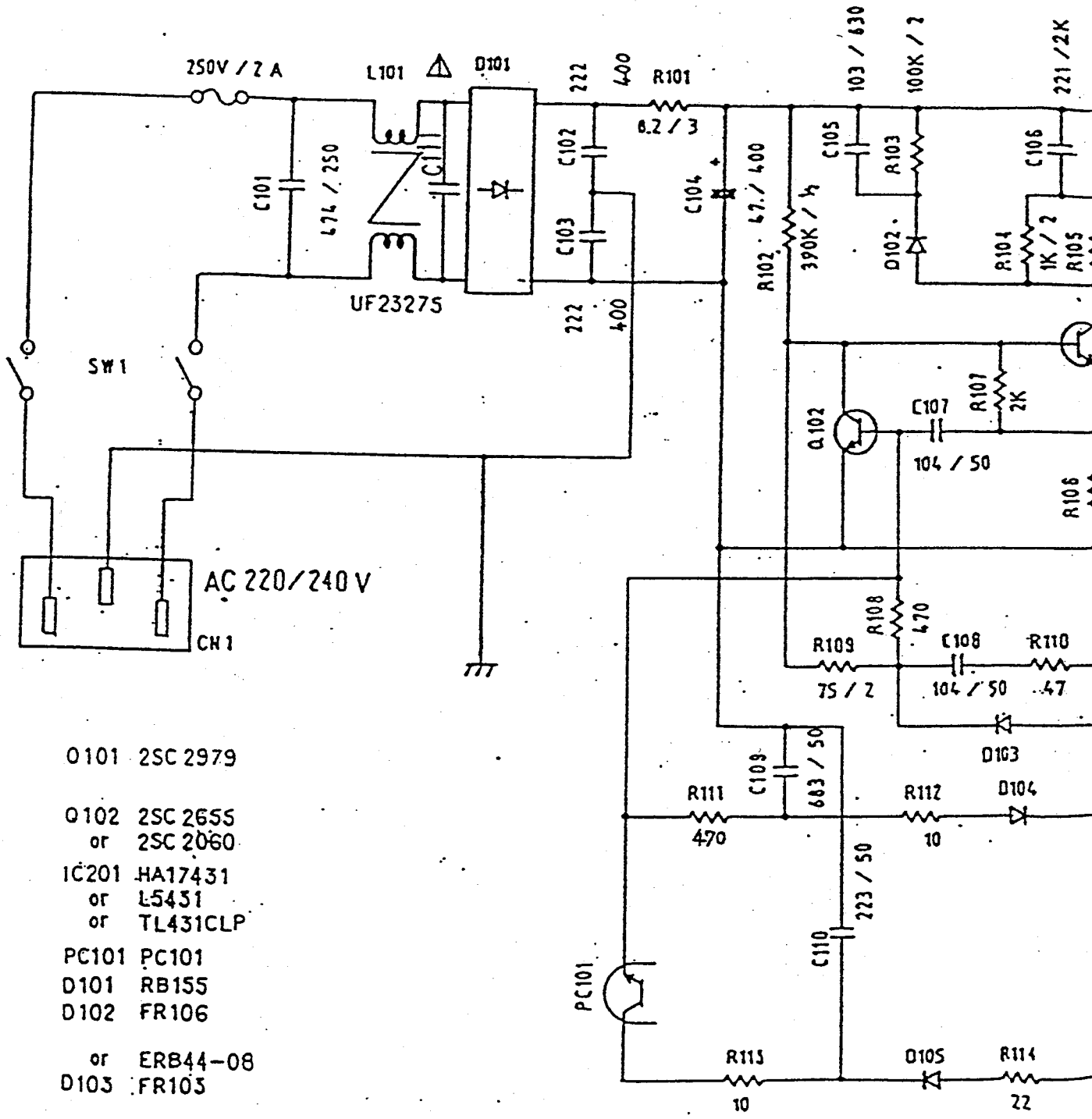

Q101 2SC 2979

Q102 2SC 2655
or 2SC 2060

IC201 HA17431
or L5431
or TL431CLP

PC101 PC101

D101 RB155

D102 FR106
or ERB44-08

D103 FR103
or ERB44-02

D104, D105 1S2076
or 1S2473

D201 FR303
or 30DF2

D202 HRW34-01
or ESAC82-04

REV	REVISIONS DESCRIPTION	DATE	APPROVED

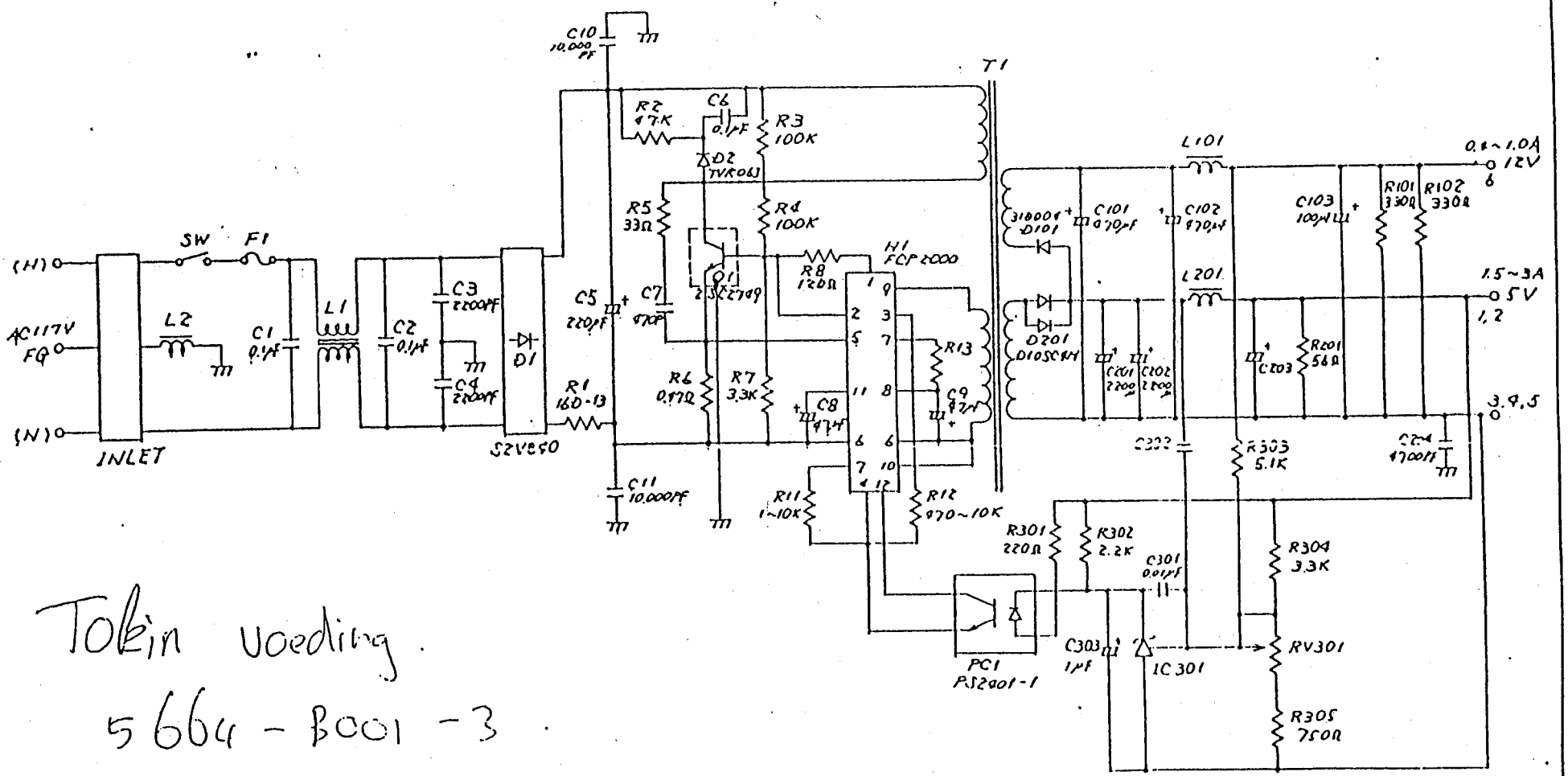

Tokin voeding.

5664 - B001 - 3.

→ Bruine print.

TOLERANCES	
UNDER 30	±0.1
30 THRU 300	±0.2
OVER 300	±0.1

USED ON

NEXT ASSY

MATERIAL

FINISH

DRAWN BY I. Yabuta DATE 9/30/85

CHECKED DATE

ENGINEER DATE

APPROVED DATE

APPROVED DATE

ATARI (JAPAN) CORPORATION
Toranomon Kyosai Building 3F
4-3-10, Toranomon Minato-ku Tokyo 105

TITLE
TYPICAL 1040STF(M) POWER SUPPLY

SIZE DRAWING NO REV
B

SCALE NONE SHEET 1 OF 1

REV	REVISIONS DESCRIPTION	DATE	APPROVED
	SEE SHEET 1.		

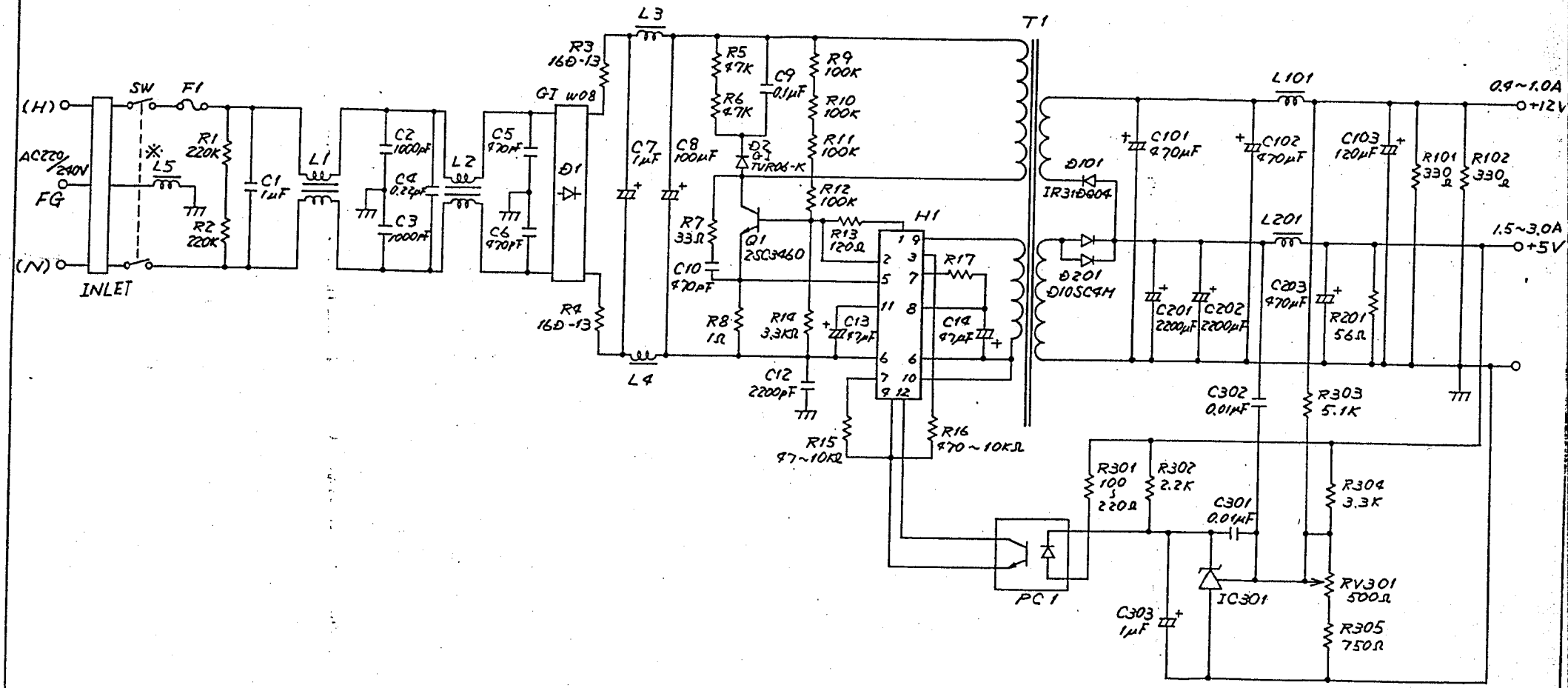

1. ※ ; L5 ; CA070086-002 ONLY.

NOTES-UNLSS OTHERWISE SPECIFIED ;

TOLERANCES	
UNDER 30	±0.1
30 THRU 300	±0.2
OVER 300	±0.4

USED ON: 520STFM / 1040STFM

NEXT ASSY

MATERIAL

FINISH

DRAWN BY: I. Yoshida DATE: 5/8/86

CHECKED DATE

ENGINEER: A. Shinagawa DATE: 6-26-86

APPROVED DATE

APPROVED: DATE: 7/31

ATARI (JAPAN) CORPORATION
Toranomon Kiyoshi Building 3F
4-3-10, Toranomon Minato-ku, Tokyo 105

TITLE: POWER SUPPLY ASSY (220 ~ 240 V)

SIZE: B DRAWING NO.: CA070086-xxx REV: A

SCALE: NONE SHEET: 5 OF 5

THIRD ANGLE SYSTEM DIMENSION : mm