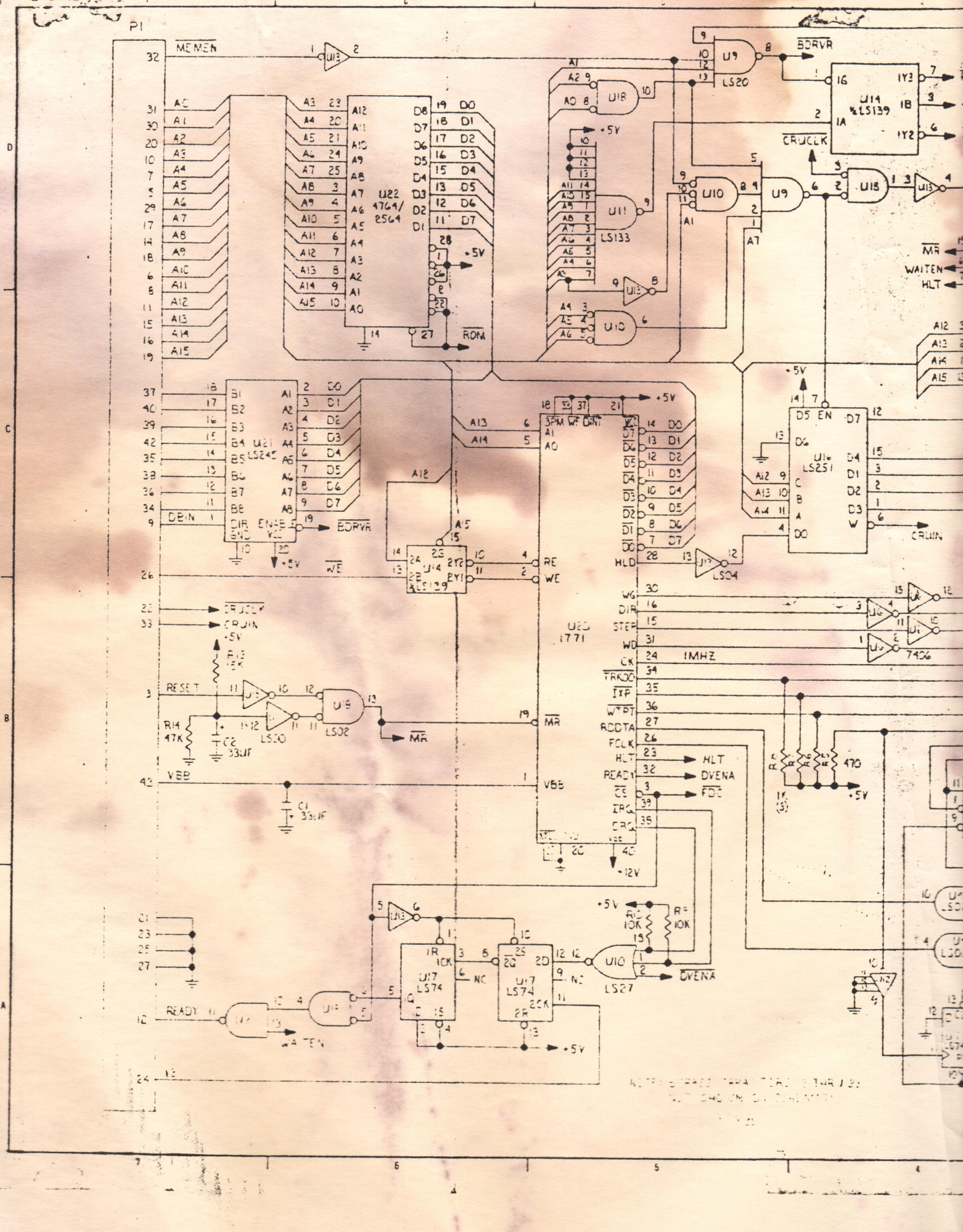

P1
MEMEN
U13
U22
4764/
2564
ROM
+5V
U9
LS20
BDRVR
U14
74LS139
CRUCLK
U18
U11
LS133
U10
U8
LS04
MR
WAITEN
HLT
A12
A13
A14
A15
U21
LS245
DBIN
DIR
ENABLE
BDRVR
WE
U15
LS251
CRUIN
U4
74LS139
U20
1771
WG
DIR
STEP
WD
CK
1MHZ
TRK00
IXP
WPRT
RDDTA
FCLK
HLT
READY
DVENA
FDC
IRQ
DRQ
7406
RESET
R13
10K
R14
47K
C2
33UF
LS00
LS02
C1
33UF
VBB
VDD
-12V
470
U17
LS74
U7
LS27
R9
10K
R8
10K
WAITEN
NOTE: STRAP TERMINAL 9 TO 1 FOR 1.2 MHZ OPERATION