AntiJack 7800 MoD v3.5

What it is

The AntiJack Mod is a DIY project by Cleggy & Juan (marauder666 & juansolo on AtariAge). It is meant for people out there with a bit of soldering ninjitsu to modify their own PAL 7800's to output S-Video so the picture isn't rubbish. If you are not confident soldering veroboard then this project is probably not for you. If you are, pulling a few components and making this should be a relative doddle. Just bear in mind that some setup will be required and it's a little more intensive than other upgrades out there.

What it does

There are three problems with the PAL 7800 that result in it's frankly god awful picture. The first is that the PAL 7800's MARIA shares it's colourburst clock with the TIA. This causes the majority of the diagonal dot crawl interference. Secondly the MARIA and TIA chroma signals are blended. So even though you're only really using one at a time (either 2600 mode or 7800), they still have an effect on one another and getting a good picture from one comes at the expense of the other. Finally there is a colour rolling issue that appears to be inherent to the MARIA, it varies from machine to machine and is effected by heat. There doesn't appear to be a way around this one at the moment.

The AJM addresses the first two issues by disconnecting the MARIA from the on-board clock, running it from it's own stand alone clock, and by adding an automatic switch that selects the active chroma signal and grounds the inactive one, outputting only one signal and eliminating any crosstalk.

We've made it both a stand-alone board or as an add-on board for the UAV. The AJM-UAV solution is the highest quality and the easiest to set up, but for me the difference between that and the stand-alone is not worth the cost of the UAV here in the UK. But if you've already got one, adding the AJM-UAV this will make a pretty dramatic improvement to the picture quality over the UAV on it's own.

What about NTSC

The NTSC 7800 doesn't have the same issues as the PAL one. The majority of the picture woes on the PAL machine are from the shared on board clock and poor layout. The NTSC machine does things differently as the MARIA gets it's clock from the TIA. As such it's not as big of a deal.

That said, it's not without it's own issues and in the process of me finally buying one to experiment with, Cleggy found a timing miss-match between the luma and chroma signals. We've done a thing to address that also.

Also in a period where we were unable to grab a UAV, we made an all-in-one mod with surprisingly good results.

Managing expectations - PAL

It's not perfect, though on a CRT it's pretty close. You still get mild dot crawl on odd colours on the 7800 and on a panel you'll still likely see jail bars on the 2600. But it's 80 million times better (we measured) than it was. If you're still getting a poor picture it's most likely down to the trimpots being set wrong. Don't assume they were set right out of the factory as none of the three 7800's we've modded have been close. Spend some time tweaking it for the screen you'll be using it on and it'll be as good as it can be.

Some modern panel TVs have terrible analogue processing. If it looks bad no matter what you do and you've not made any mistakes along the way, it's likely your telly.

Likewise cheap Chinese S-Video leads can be a bit pants and can pick up interference themselves (which caused us all sorts of head-scratching during testing). We've found Belkin Pure AV S-Video leads to be of good quality and reasonable value.

Prep - PAL

As a minimum **you must remove the RF modulator, R25, R35 and R74**. Also you'll need to remove any goop or glue on the two colour trimmers R42 and R43 as they'll almost certainly require adjusting for the best picture. All the other connections can be made to resistor legs.

Though if you want to be neat, and why wouldn't you, I'd suggest you remove the following:

R29 R64 R65 R66 R67 R74 C54 C55

As they have a tiny chance of causing interference, are slightly in the way, I'd also pull **L5 L6** and **Q8.**

Where you install it or how to do your connections is up to you. But where the modulator used to be makes a lot of sense, as that's where most of the connections are. Keep your wires short if possible.

Vero notes – PAL (page 4)

It's not the prettiest of layouts and there are a couple of bodges in there to minimize the size of the board. The first is that the 2K2 and 3K3 resistors go into the same hole on the line of the centre pin of the 2N3904. It would have meant another row to do it neatly… The other isn't so much of a bodge, it's the connection between the luma and chroma, add that link and you can use either output as composite video.

The clock (4.433619Mhz CMOS oscillator) is now off-board in this revision because it takes up too much space otherwise. It's tiny on it's own. The audio board is simply there to show you the wiring. I'd personally do this on-board and not on vero.

ANTIJACK 7800 MOD v3.5

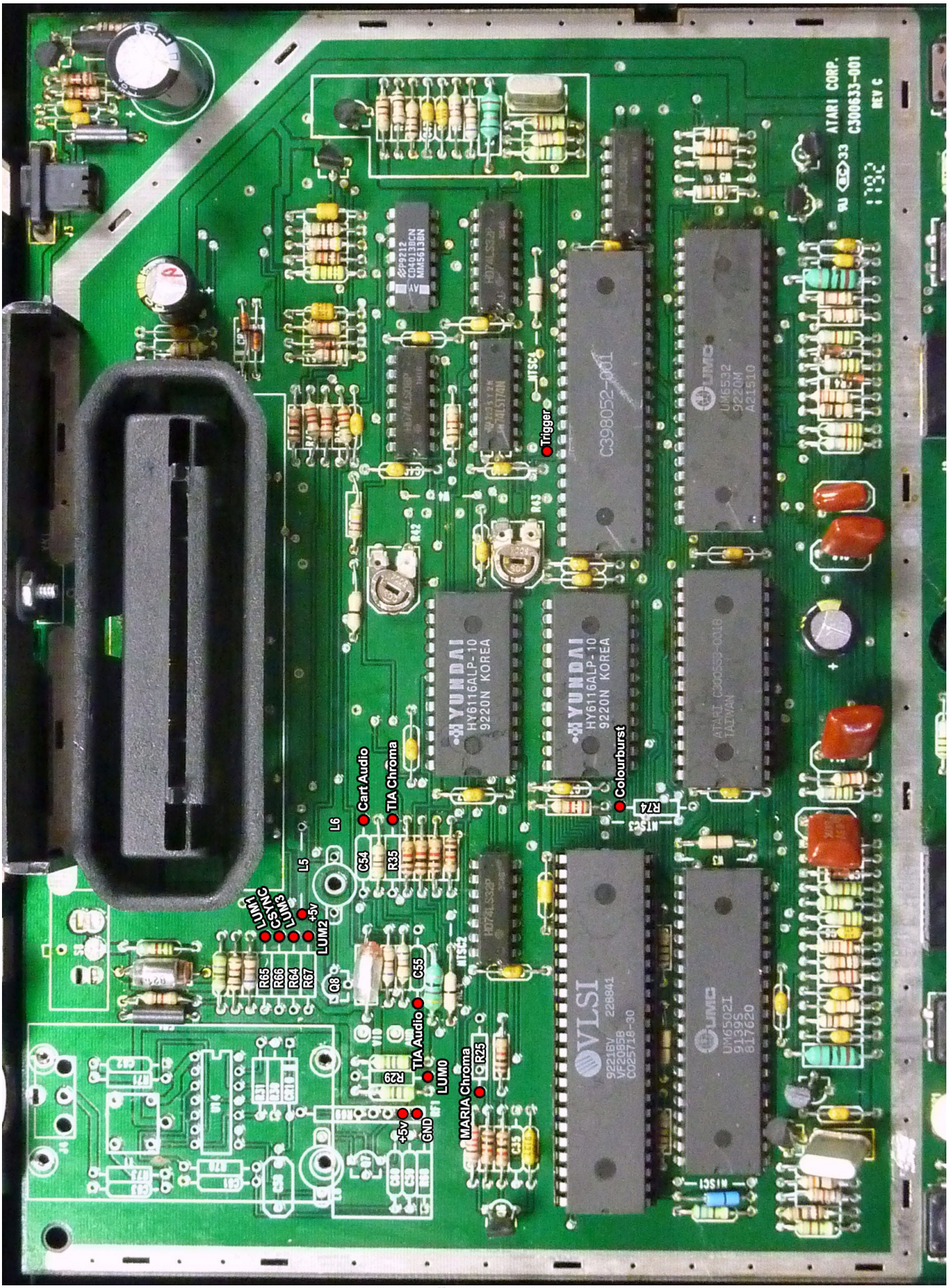

ANTIJACK 7800 MOD v3.5

AJMv2.2 for PAL 7800

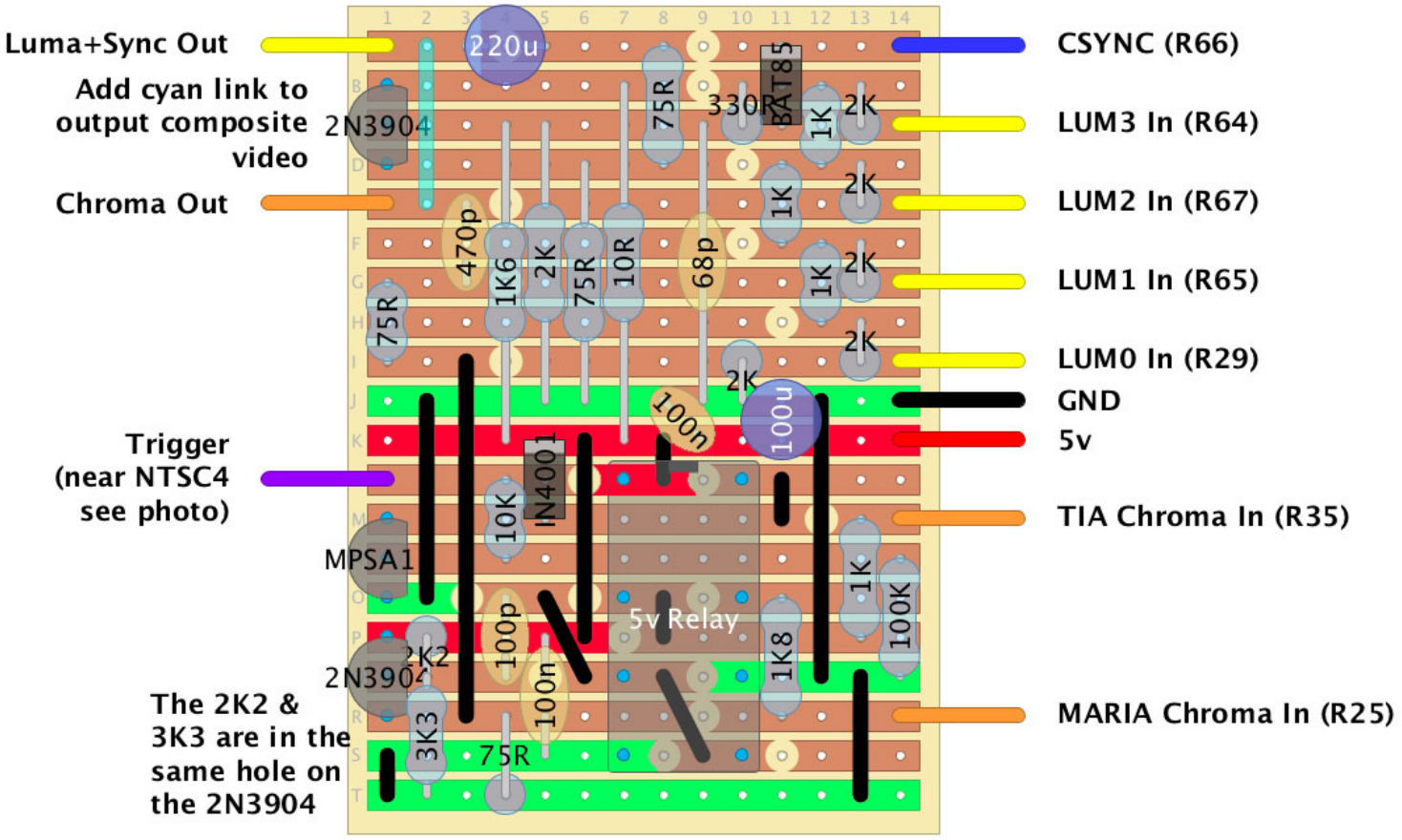

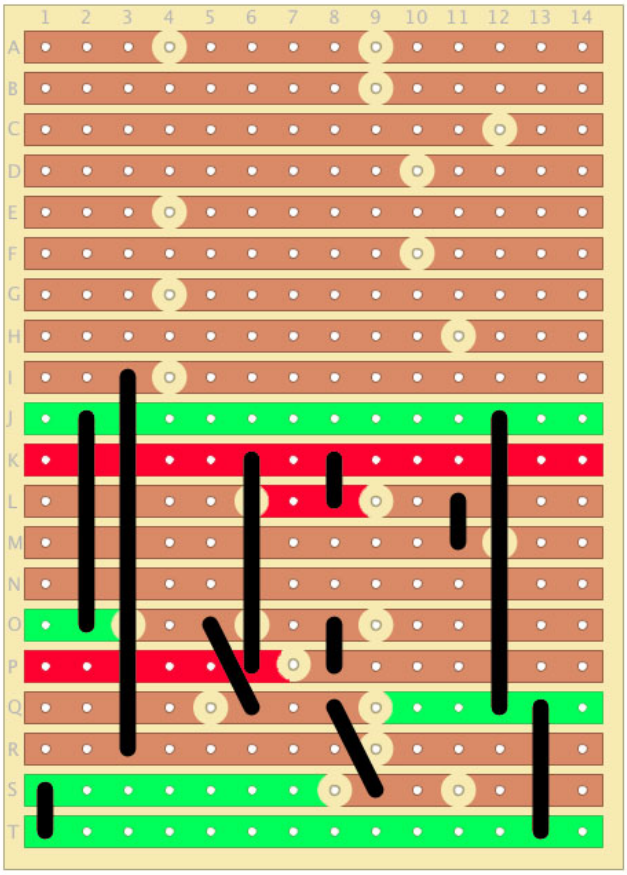

14x20
22 cuts
11 links

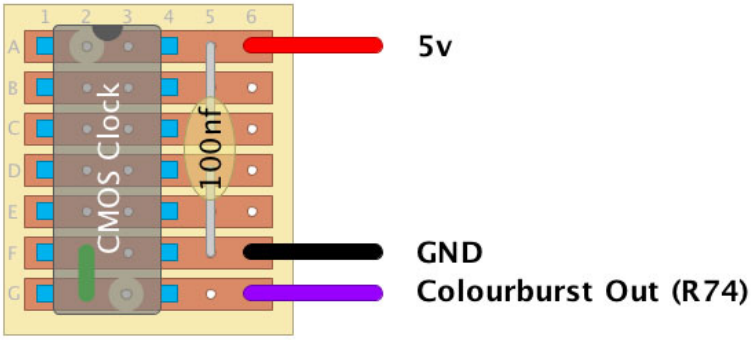

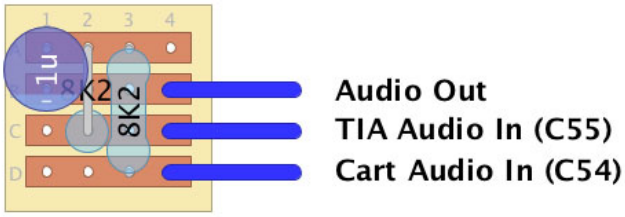

SCHEMATIC - PAL

For those who want to just freestyle it on perf, or make a PCB (at some point we'll get around to it, but other things keep getting in the way), here's the schematic:

J1 is not required. Connecting this will give a composite output

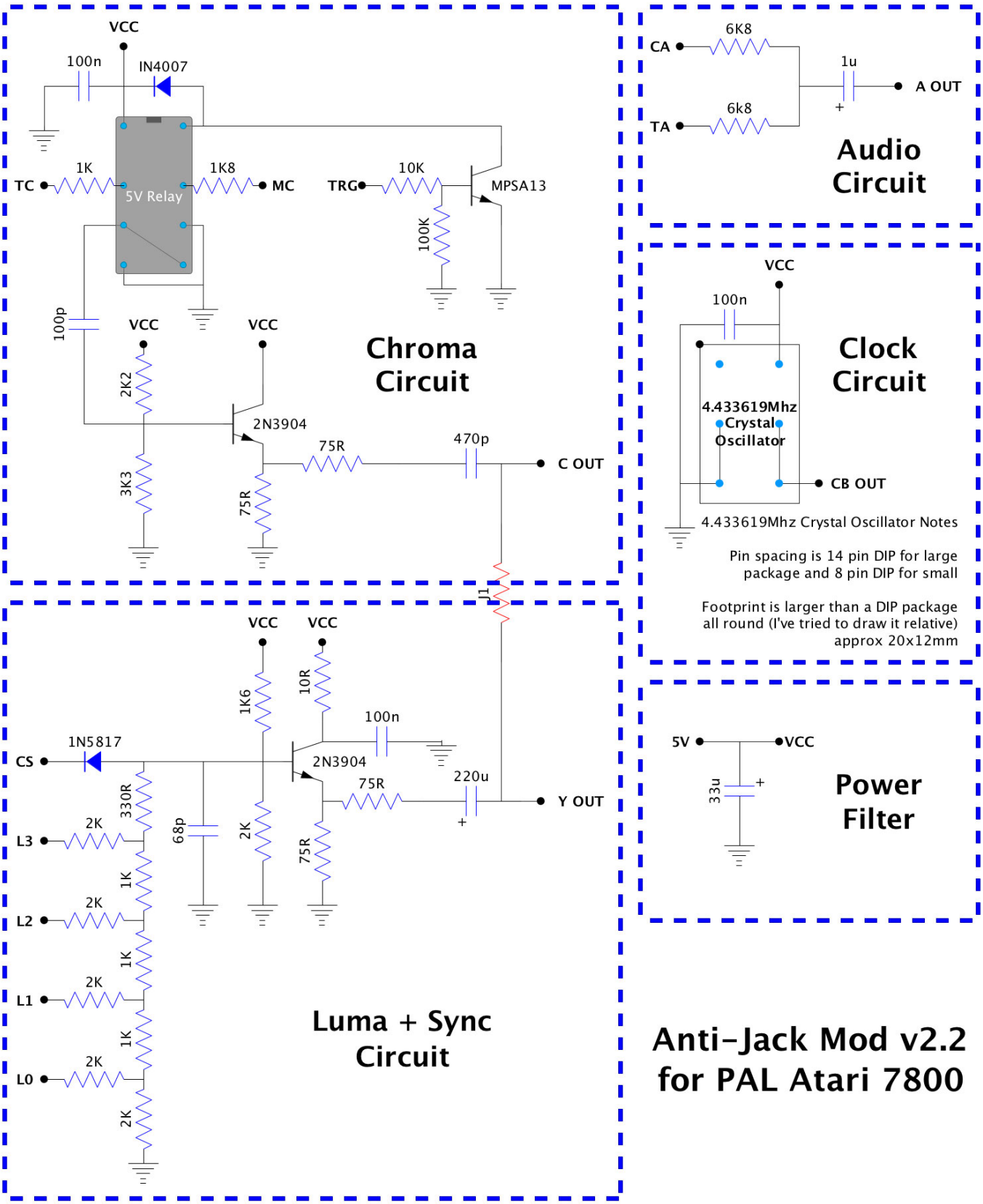

SETUP

For both 7800 and 2600 games confirm that you've got a picture, it's in colour and you've got sound. It might look like crap at this point if the 7800 we used for this document is anything to go by as it was atrociously set up out of the factory. But if it's working, then you're gonna need to tweak it to be pretty.

Firstly set the pot on the AJM fully clockwise. The text on the copyright logo of Asteroids is really bright white and a good thing to use. Turn it anticlockwise so it's bright but not blooming, it might not take much turning to get there. If you've got a Harmony cart there's a demo on the 2600 called Chiphead. There's 3D section of that which is as if you're going down a corridor with blue vector squares. In the background however are some other shapes that are one step from black, you should barely be able to see them. If you can't see them, turn the luma up until you just can.

We use BallBlazer to set the colour on the 7800 using the trimmer closest to the cartridge slot (R42). When it's right the rotofoil is C64 red, ie: it's red, but a bit brown... If it's intense red, the intro-screen Lucasfilm logo will be wrong and will be kind of rose gold rather than gold. The Lucasfilm logo is also a good indicator that you've got your luma lines wired right as the gradients should be spot on

Finally I use Combat for the 2600 and the lower colour trimpot (R43). When you start the game the left tank should be light blue and the right pink, the background green and the border sandy yellow.

I've only set up 3 machines so far and I can't emphasise enough how badly set up they were out of the box. Likely because prior to the upgrade the colour outputs were blended to a degree and to get a good picture from one side of the machine you had to compromise the other.

For what it's worth we have a starting point as all 3 of our machines ended up in the same sort of area:

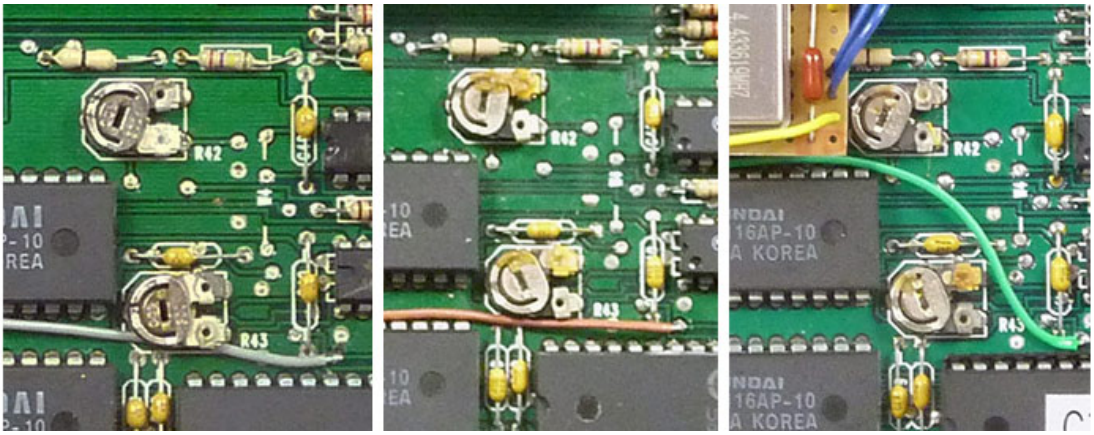

PAL UAV + AJM

Though I'm not convinced it's worth the expense on a PAL machine over the AJM above, you can make a UAV equipped PAL machine much, much better by adding the chroma switch and colourburst clock.

If you haven't removed R25 & R35, you must remove them for this mod to work. Next disconnect the T-Col and Colour lines from the UAV. They will now go to the AJM-UAV. T-Col is the TIA chroma in, and colour should be the MARIA chroma in. If they're the wrong way around your picture will be B&W, so swap that if that's the case. The chroma out wants to go to the UAV colour in. T-Col is no longer used.

You will now need to remove R74 and connect the colour burst line to the top pad of that. That disconnects the on-board clock and replaces it with the one on the AJM.

The setup is the same as for the all-in-one mod above, just go through the same steps and you should be right. If you want decent output, you can't skip this step.

There's also nothing stopping you removing all the parts in the all-in-one guide above. You will no longer be able to use the modulator after this mod, only the UAV will output colour.

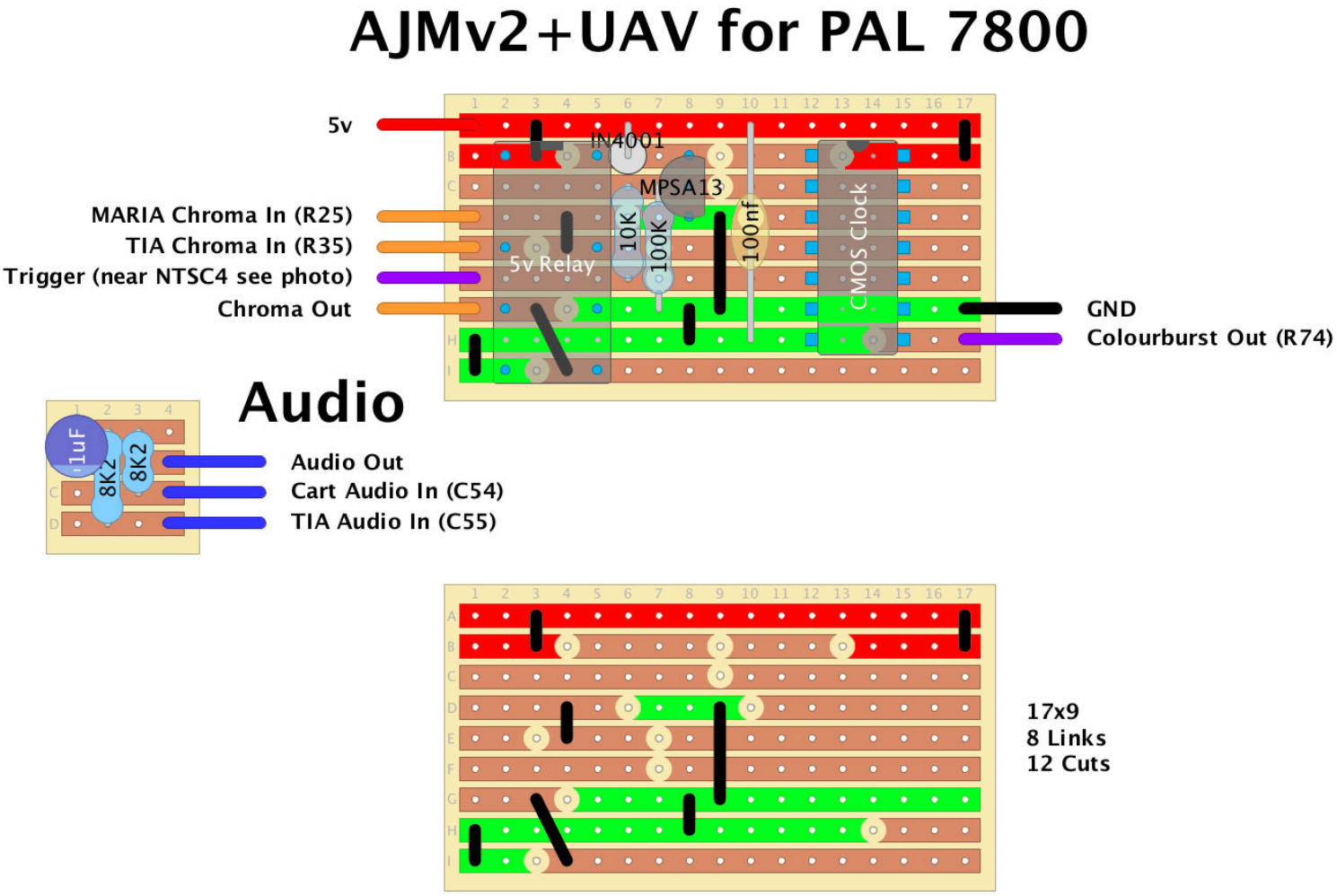

NTSC UAV + CHROMA SHIFT

Quite frankly, the path of least resistance with the NTSC 7800 is the UAV mod (available from the Brewing Academy). Lacking many of the PAL machine's flaws this just goes in there and you get pretty good results. It's not perfect however!

Cleggy noticed a timing mis-match between the luma an chroma signals on our test NTSC 7800 with Crossbow verifying his was the same. It certainly looks like this is a common NTSC 7800 problem as I can see it on ZPH's videos for example and as of the time of writing we've verified it on yet another NTSC 7800.

The problem is that the chroma signal is about 300ns ahead of the luma, so to slow that down he came up with using a 4050's gates (each having a 55ns propagation time it's a little bit more). The resulting picture is greatly improved for those of us who are bothered by such things.

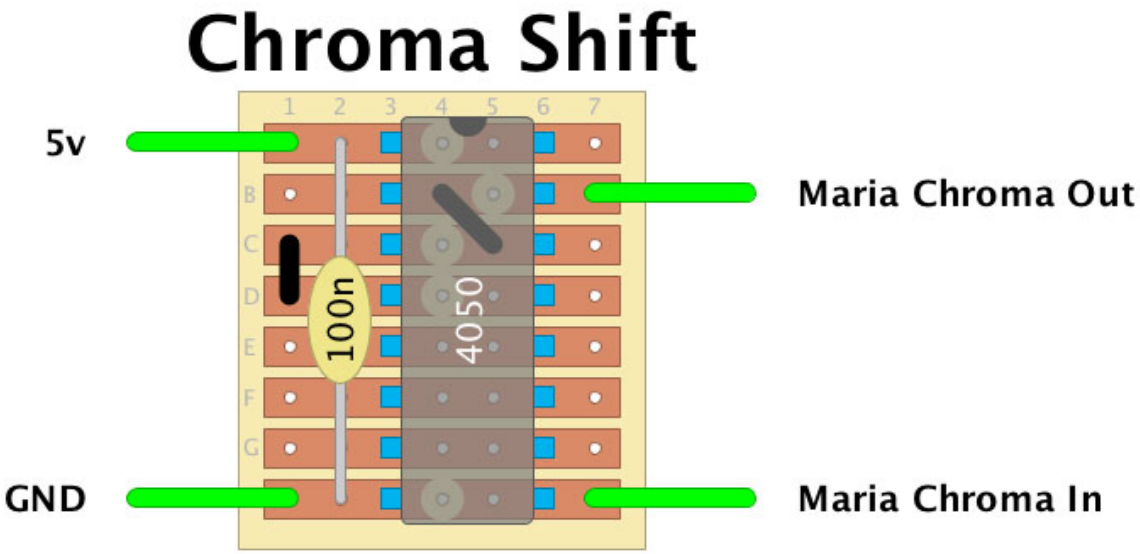

To install simply disconnect the line that goes from R16 to the colour in of the UAV. Run it instead to the chroma in above. Run the chroma out to the colour in of the UAV. You'll need to find a 5v line and ground to connect up also, but otherwise, that's all there is to it.

NTSC ALL-IN-ONE MOD

That said, if you don't have access to a UAV for some reason, or you're just a vero whore and want to DIY it, we've got you covered. The quality from this is pretty much indistinguishable from a UAV+Shifter install, certainly on a CRT. We were more than a little shocked with the results.

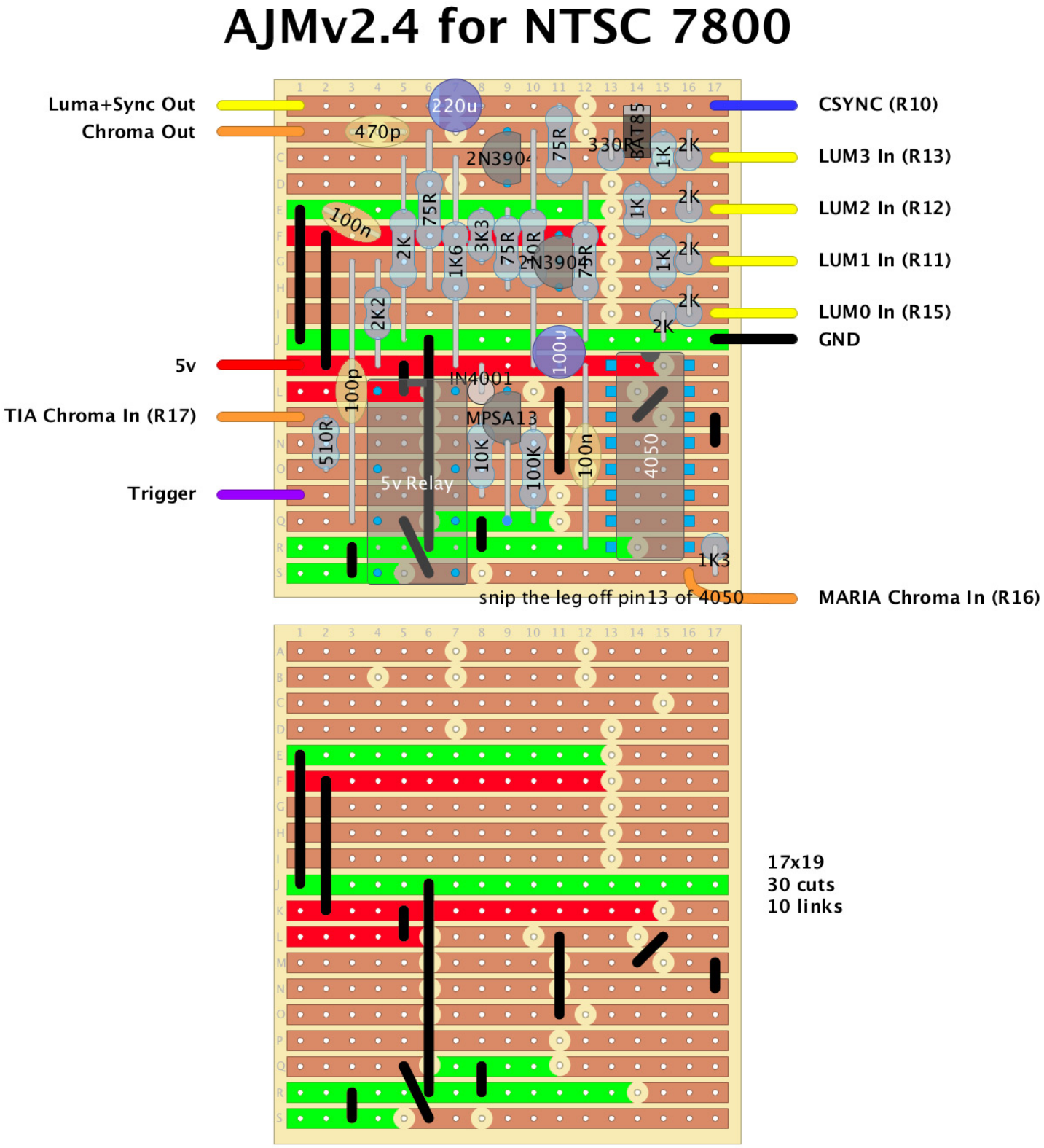

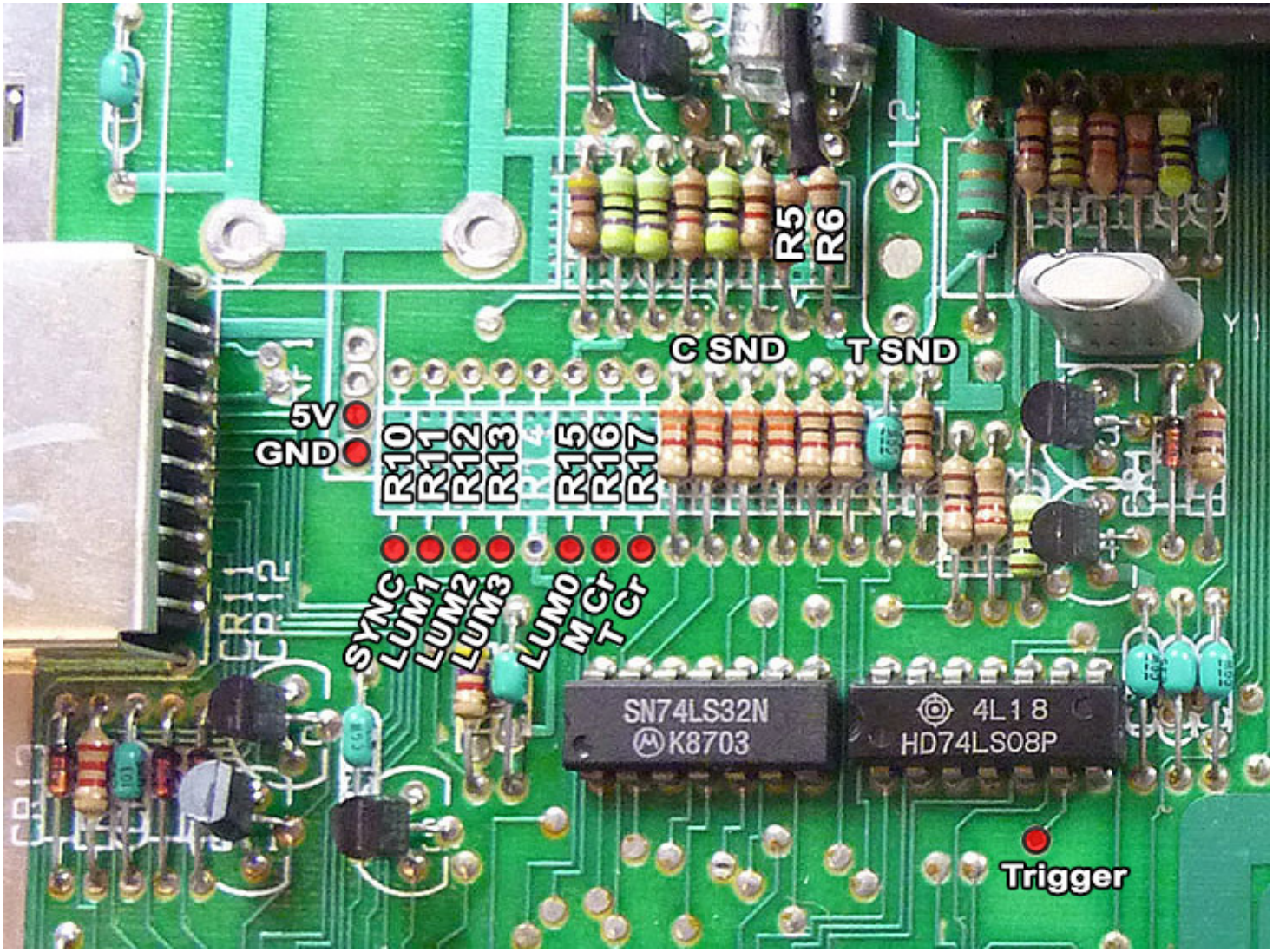

Lift the top pins of R5 & R6, connect them together and output the sound via a 1u cap (shown above). I leave it up to the installer how to do jacks but I should mention that installing a board mounted phono as above requires holes drilled and two track cuts.

VERSION CONTROL

v1	Initial release.
v1.1	Added the NTSC mods.
v1.2	More detail in the setup section.
v1.3	More clarity in the UAV Mod section.
v1.4	I keep adding to that setup section…
v2	NTSC section fully fleshed out.
v2.1	Added a 1K6 resistor to the MARIA chroma in as the levels were too high.
v2.2	Added a 820R resistor to the TIA chroma to tweak the level there too.
v3	Total revamp of the mods and doc.
v3.1	The NTSC mod returns.
v3.2	NTSC mod updated to reduce jailbars.
v3.3	…and more tweaking of the NTSC mod.
v3.4	…and another. Hopefully the last.
v3.5	LUM0 line in the wrong hole on the NTSC photo. Now in the right hole.